EPSON®
EXCEED YOUR VISION

S1D13706 Embedded Memory LCD Controller

Connecting to the Sharp HR-TFT Panels

Document Number: X31B-G-011-05

Status: Revision 5.1

Issue Date: 2009/03/03

© SEIKO EPSON CORPORATION 2001-2009. All Rights Reserved.

Information in this document is subject to change without notice. You may download and use this document, but only for your own use in evaluating Seiko Epson/EPSON products. You may not modify the document. Epson Research and Development, Inc. disclaims any representation that the contents of this document are accurate or current. The Programs/Technologies described in this document may contain material protected under U.S. and/or International Patent laws.

EPSON is a registered trademark of Seiko Epson Corporation. All other trademarks are the property of their respective owners.

Table of Contents

1 Introduction 5
2 Connecting to the Sharp LQ039Q2DS01 HR-TFT 6
2.1 External Power Supplies 6
2.1.1 Gray Scale Voltages for Gamma Correction 6
2.1.2 Digital/Analog Power Supplies 7
2.1.3 DC Gate Driver Power Supplies 7
2.1.4 AC Gate Driver Power Supplies 8
2.2 HR-TFT MOD Signal 9
2.3 S1D13706 to LQ039Q2DS01 Pin Mapping 10
3 Connecting to the Sharp LQ031B1DDxx HR-TFT 12
3.1 External Power Supplies 12
3.1.1 Gray Scale Voltages for Gamma Correction 12
3.1.2 Digital/Analog Power Supplies 13
3.1.3 DC Gate Driver Power Supplies 13
3.1.4 AC Gate Driver Power Supplies 13
3.2 HR-TFT MOD Signal 13
3.3 S1D13706 to LQ031B1DDxx Pin Mapping 14
4 Test Software 16
5 References 17
5.1 Documents 17
5.2 Document Sources 17
6 Technical Support 18
6.1 EPSON LCD Controllers (S1D13706) 18
6.2 Sharp HR-TFT Panel 18

1 Introduction

This application note describes the hardware and software environment required to connect to the Sharp HR-TFT panels directly supported by the S1D13706. These panels are:

- Sharp LQ031B1DDXX 160 x 160 HR-TFT panel.
- Sharp LQ039Q2DS01 320 x 240 HR-TFT panel.

The designs described in this document are presented only as examples of how such interfaces might be implemented. This application note is updated as appropriate. Please check for the latest revision of this document before beginning any development. The latest revision can be downloaded at www.erd.epson.com.

We appreciate your comments on our documentation. Please contact us via email at documentation@erd.epson.com.

2 Connecting to the Sharp LQ039Q2DS01 HR-TFT

2.1 External Power Supplies

The S1D13706 provides all necessary data and control signals to connect to the Sharp LQ039Q2DS01 320 x 240 HR-TFT panel. However, it does not provide any of the voltages required for gray scaling, gate driving, or for the digital and analog supplies. Therefore, external supplies must be designed for any device utilizing the LQ039Q2DS01.

2.1.1 Gray Scale Voltages for Gamma Correction

The standard gray scale voltages can be generated using a precise resistor divider network that supplies two sets (A and B) of nine reference voltages to a National Semiconductor 9-Channel Buffer Amplifier (LMC6009). The LMC6009 buffers these nine reference voltages and outputs them to the panel column drivers. The A/B inputs allow the two sets of reference voltages to be alternated, compensating for asymmetrical gamma characteristics during row inversion. This input is controlled by the S1D13706 output signal REV which toggles every time a horizontal sync signal is sent to the panel.

The REV signal is also used to generate the highest gray scale voltage (V0 or black) by buffering REV and shifting its maximum level to the maximum gray scale voltage (CON_POWER). CON_POWER is supplied by a National Semiconductor micropower Voltage Regulator (LP2951). Figure 2-1: “Sharp LQ039Q2DS01 Gray Scale Voltage (V0-V9) Generation” shows the schematic for gray scale voltage generation.

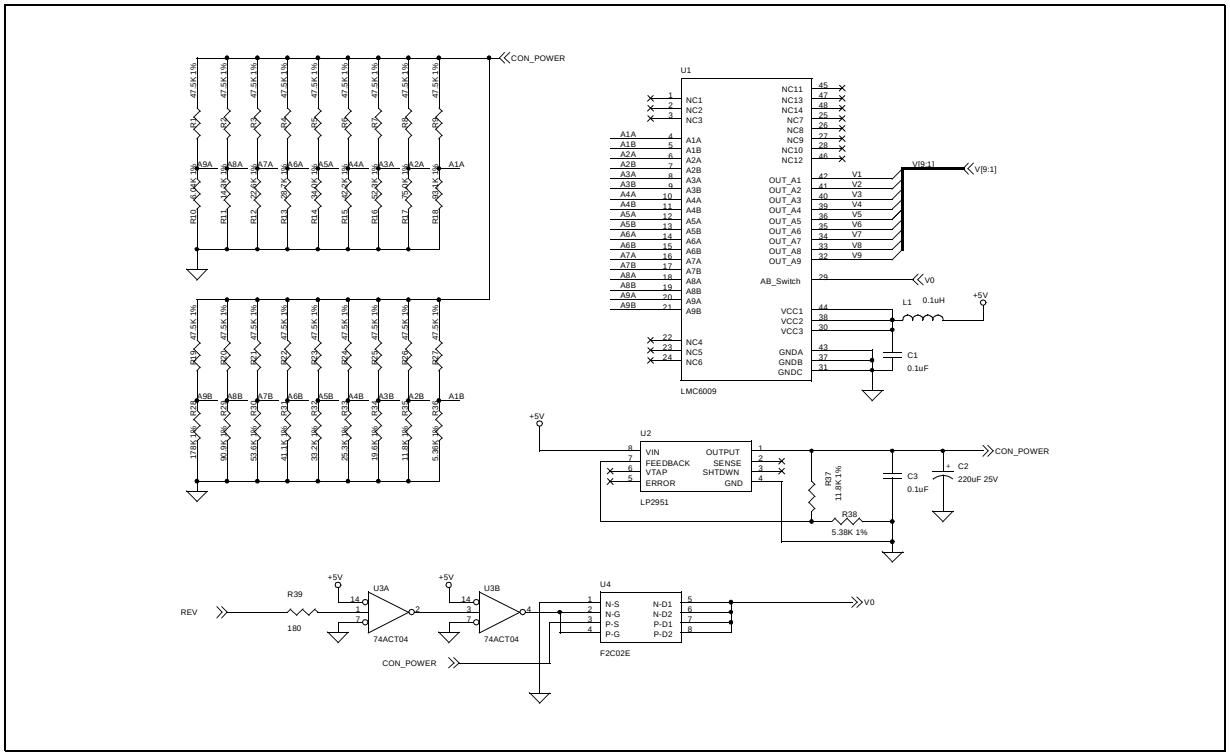

Figure 2-1: Sharp LQ039Q2DS01 Gray Scale Voltage (V0-V9) Generation

2.1.2 Digital/Analog Power Supplies

The digital power supply (VSHD) must be connected to a 3.3V supply. The analog power supply (VSHA) must be connected to a 5.0V supply.

2.1.3 DC Gate Driver Power Supplies

The gate driver high level power supply (V_{DD}) and the gate driver logic low power supply (V_{SS}) have typical values of +15V and -15V respectively. These power supplies can be provided by a Linear Technology high efficiency switching regulator (LT1172). The two power supplies can be adjusted through their allowable ranges using the potentiometer VR1.

The gate driver logic high power supply (V_{CC}) is defined as V_{SS} + VSHD. The typical V_{CC} voltage of -11.7V can be supplied from V_{SS} using a 3.3V zener diode which provides the necessary voltage change.

Figure 2-2: “Panel Gate Driver DC Power Supplies” shows the schematic for V_{SS}, V_{DD} and V_{CC}.

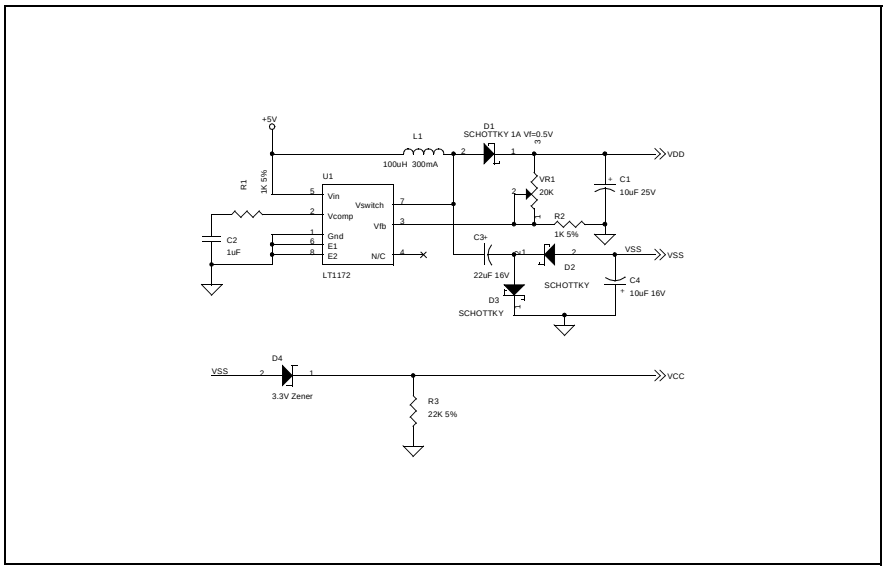

Figure 2-2: Panel Gate Driver DC Power Supplies

2.1.4 AC Gate Driver Power Supplies

The gate drive low level power supply (V_{EE}) is an AC power supply with a DC offset voltage (offset typically -9.0V). The AC component is the common electrode driving signal (V_{COM}) which has a voltage of ±2.5V. V_{COM} must be alternated every horizontal period and every vertical period. The S1D13706 output signal REV accomplishes this function and generates the alternating V_{COM} signal which is superimposed onto V_{EE}. Figure 2-3: "Panel Gate Driver AC Power Supplies," on page 8 shows the schematic for generating V_{COM} and V_{EE}.

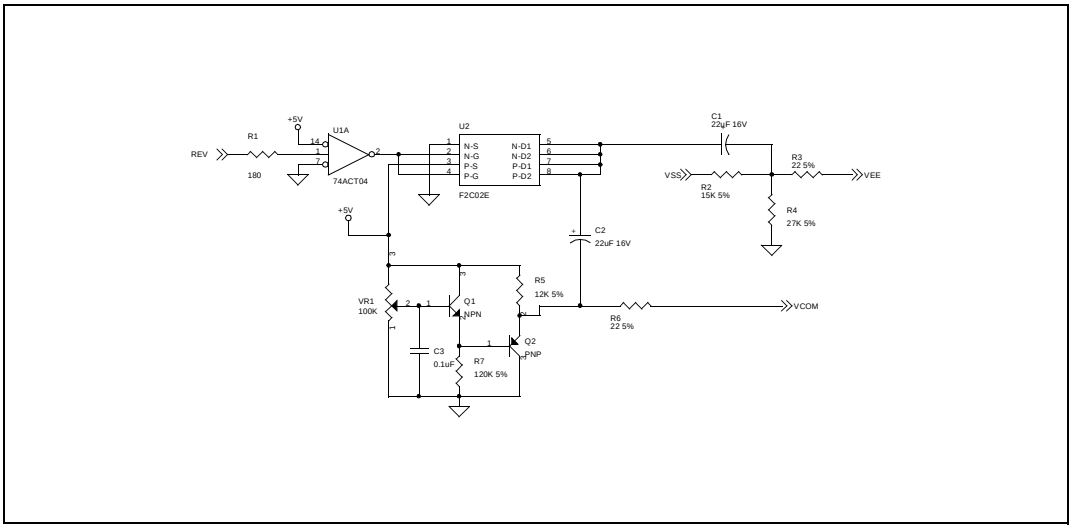

Figure 2-3: Panel Gate Driver AC Power Supplies

2.2 HR-TFT MOD Signal

The HR-TFT panel uses an input signal (MOD) to control the power-on sequencing of the panel. This HR-TFT signal should not be confused with the S1D13706 signal DRDY (referred to as MOD for passive panels).

To power-on the HR-TFT panel, MOD must be held low until the power supply has been turned on for more than two FRAMES. To power-off the HR-TFT panel, MOD must be forced low before the power supply is turned off. This sequencing requires two software controlled GPIO pins from the S1D13706 (see Figure 2-4: “HR-TFT Power-On/Off Sequence Timing”).

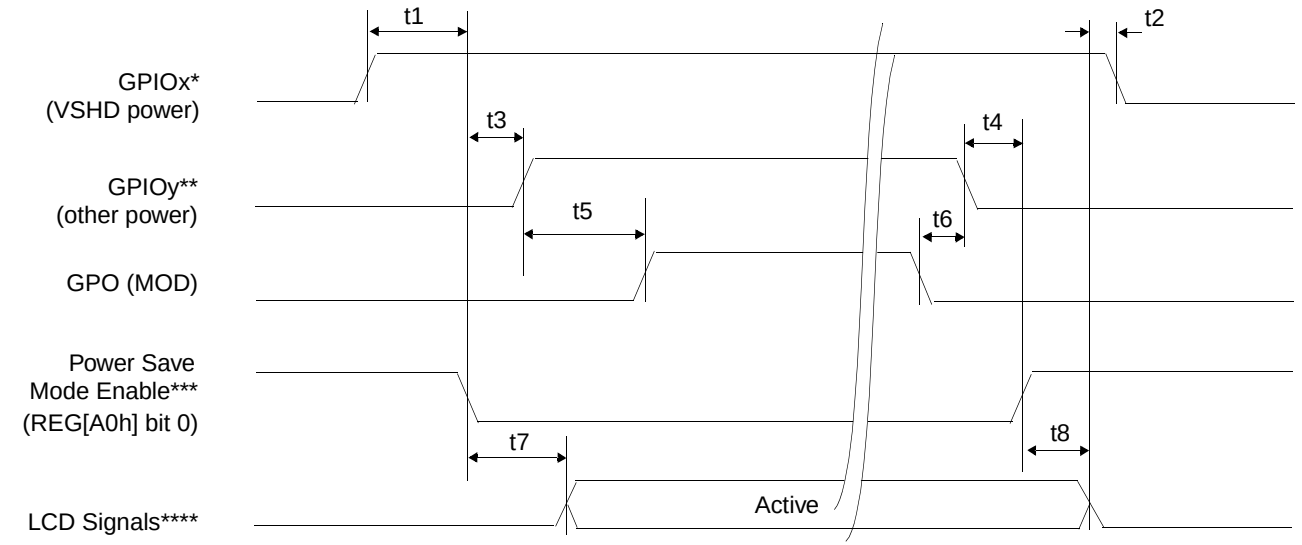

*It is recommended to use one of the general purpose IO pins GPIO[6:4] to control the digital power supply VSHD.
** It is recommended to use one of the general purpose IO pins GPIO[6:4] to control the other power supplies required by the HR-TFT panel.
***The S1D13706 LCD power-on/off sequence is activated by programming the Power Save Mode Enable bit (REG[A0h] bit
****LCD Signals include: FPDAT[17:0], FPSHIFT, FPLINE, FPFRAME, and GPIO[3:0].

Figure 2-4: HR-TFT Power-On/Off Sequence Timing

Table 2-1: HR-TFT Power-On/Off Sequence Timing

Symbol	Parameter	Min	Max	Units
t1	LCD Power (VSHD) active to Power Save Mode disabled	0		ns
t2	LCD signals low to LCD Power (VSHD) inactive	0		ns
t3	Power Save Mode disabled to LCD Power (other) active	0		ns
t4	LCD Power (other) inactive to Power Save Mode enabled	0		ns
t5	LCD Power (other) active to MOD active	2		FRAME
t6	MOD inactive to LCD Power (other) inactive	0		ns
t7	Power Save Mode disabled to LCD signals active		20	ns
t8	Power Save Mode enabled to LCD signals low		20	ns

2.3 S1D13706 to LQ039Q2DS01 Pin Mapping

Table 2-2: S1D13706 to LQ039Q2DS01 Pin Mapping

LCD Pin No.	LCD Pin Name	S1D13706 Pin Name	Description	Remarks
1	VDD	-	Power supply of gate driver (high level)	See Section 2.1, “External Power Supplies” on page 6
2	VCC	-	Power supply of gate driver (logic high)	See Section 2.1, “External Power Supplies” on page 6
3	MOD	-	Control signal of gate driver	See Section 2.2, “HR-TFT MOD Signal” on page 9
4	MOD	-	Control signal of gate driver	See Section 2.2, “HR-TFT MOD Signal” on page 9
5	U/L	-	Selection for vertical scanning direction	Connect to VSHD (top / bottom scanning)
6	SPS	FPFRAME	Start signal of gate driver	
7	CLS	GPIO1	Clock signal of gate driver	
8	VSS	-	Power supply of gate driver (logic low)	See Section 2.1, “External Power Supplies” on page 6
9	VEE	-	Power supply of gate driver (low level)	See Section 2.1, “External Power Supplies” on page 6
10	VEE	-	Power supply of gate driver (low level)	See Section 2.1, “External Power Supplies” on page 6
11	VCOM	-	Common electrode driving signal	See Section 2.1, “External Power Supplies” on page 6
12	VCOM	-	Common electrode driving signal	See Section 2.1, “External Power Supplies” on page 6
13	SPL	GPIO3	Sampling start signal for left / right scanning	
14	R0	FPDAT11	Red data signal (LSB)	
15	R1	FPDAT10	Red data signal	
16	R2	FPDAT9	Red data signal	
17	R3	FPDAT2	Red data signal	
18	R4	FPDAT1	Red data signal	
19	R5	FPDAT0	Red data signal (MSB)	
20	G0	FPDAT14	Green data signal (LSB)	
21	G1	FPDAT13	Green data signal	
22	G2	FPDAT12	Green data signal	
23	G3	FPDAT5	Green data signal	
24	G4	FPDAT4	Green data signal	
25	G5	FPDAT3	Green data signal (MSB)	

Table 2-2: S1D13706 to LQ039Q2DS01 Pin Mapping (Continued)

LCD Pin No.	LCD Pin Name	S1D13706 Pin Name	Description	Remarks
26	B0	FPDAT17	Blue data signal (LSB)	
27	B1	FPDAT16	Blue data signal	
28	B2	FPDAT15	Blue data signal	
29	B3	FPDAT8	Blue data signal	
30	B4	FPDAT7	Blue data signal	
31	B5	FPDAT6	Blue data signal (MSB)	
32	VSHD	-	Digital power supply	See Section 2.1, “External Power Supplies” on page 6
33	DGND	V_{SS}	Digital ground	Ground pin of S1D13706
34	PS	GPIO0	Power save signal	
35	LP	FPLINE	Data latch signal of source driver	
36	DCLK	FPSHIFT	Data sampling clock signal	
37	LBR	-	Selection for horizontal scanning direction	Connect to VSHD (left / right scanning)
38	SPR	-	Sampling start signal for right / left scanning	Right to left scanning not supported
39	VSHA	-	Analog power supply	See Section 2.1, “External Power Supplies” on page 6
40	V0	-	Standard gray scale voltage (black)	See Section 2.1, “External Power Supplies” on page 6
41	V1	-	Standard gray scale voltage	See Section 2.1, “External Power Supplies” on page 6
42	V2	-	Standard gray scale voltage	See Section 2.1, “External Power Supplies” on page 6
43	V3	-	Standard gray scale voltage	See Section 2.1, “External Power Supplies” on page 6
44	V4	-	Standard gray scale voltage	See Section 2.1, “External Power Supplies” on page 6
45	V5	-	Standard gray scale voltage	See Section 2.1, “External Power Supplies” on page 6
46	V6	-	Standard gray scale voltage	See Section 2.1, “External Power Supplies” on page 6
47	V7	-	Standard gray scale voltage	See Section 2.1, “External Power Supplies” on page 6
48	V8	-	Standard gray scale voltage	See Section 2.1, “External Power Supplies” on page 6
49	V9	-	Standard gray scale voltage (white)	See Section 2.1, “External Power Supplies” on page 6
50	AGND	V_{SS}	Analog ground	Ground pin of S1D13706

3 Connecting to the Sharp LQ031B1DDxx HR-TFT

3.1 External Power Supplies

The S1D13706 provides all necessary data and control signals to connect to the Sharp LQ031B1DDxx 160x160 HR-TFT panel(s). However, it does not provide any of the voltages required for the backlight, gray scaling, gate driving, or for the digital and analog supplies. Therefore, external supplies must be designed for any device utilizing the LQ031B1DDxx.

The LQ031B1DDxx (160x160) has the same voltage requirements as the LQ039Q2DS01 (320x240). All the circuits used to generate the various voltages for the LQ039Q2DS01 panel also apply to the LQ031B1DDxx panel. This section provides additional circuits for generating some of these voltages.

3.1.1 Gray Scale Voltages for Gamma Correction

The standard gray scale voltages can be generated using a precise resistor divider network as described in Section 2.1.1, “Gray Scale Voltages for Gamma Correction” on page 6. Alternately, they can be generated using a Sharp gray scale IC. The Sharp IR3E203 eliminates the large resistor network used to provide the 10 gray scale voltages and combines their function into a single IC.

The S1D13706 output signal REV is used to alternate the gray scale voltages and connects to the SW input of the IR3E203 IC. The COM signal is used in generating the gate driver panel AC voltage, V_{COM} and is explained in Section 3.1.4, “AC Gate Driver Power Supplies” on page 13. Figure 3-1: “Sharp LQ031B1DDxx Gray Scale Voltage (V0-V9) Generation” shows the circuit that generates the gray scale voltages using the Sharp IR3E203 IC.

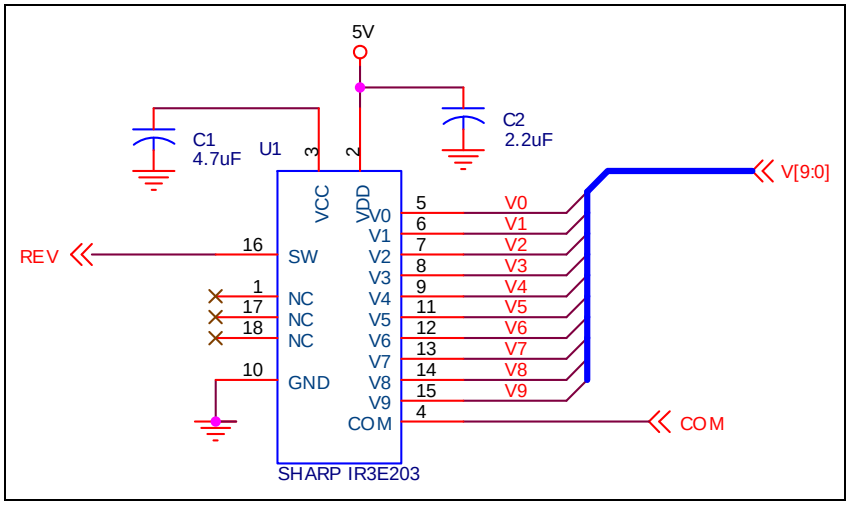

Figure 3-1: Sharp LQ031B1DDxx Gray Scale Voltage (V0-V9) Generation

3.1.2 Digital/Analog Power Supplies

The digital power supply (VSHD) must be connected to a 3.3V supply. The analog power supply (VSHA) must be connected to a 5.0V supply.

3.1.3 DC Gate Driver Power Supplies

See Section 2.1.3, “DC Gate Driver Power Supplies” on page 7 and Figure 2-2: “Panel Gate Driver DC Power Supplies,” on page 7 for details on generating V_{SS}, V_{DD}, and V_{CC}.

3.1.4 AC Gate Driver Power Supplies

See Section 2.1.4, “AC Gate Driver Power Supplies” on page 8 and Figure 2-3: “Panel Gate Driver AC Power Supplies,” on page 8 for details on generating V_{EE} and V_{COM}. If the Sharp IR3E203 is used to generate the gray scale voltages, the COM signal can be connected to the input of the F2C02E MOSFET instead of the buffered REV signal.

3.2 HR-TFT MOD Signal

See Section 2.2, “HR-TFT MOD Signal” on page 9 for details on controlling the MOD signal through software.

3.3 S1D13706 to LQ031B1DDxx Pin Mapping

Table 3-1: S1D13706 to LQ031B1DDxx Pin Mapping

LCD Pin No.	LCD Pin Name	S1D13706 Pin Name	Description	Remarks
1	VDD	-	Power supply of gate driver (high level)	See Section 3.1, “External Power Supplies” on page 12
2	VCC	-	Power supply of gate driver (logic high)	See Section 3.1, “External Power Supplies” on page 12
3	MOD	-	Control signal of gate driver	See Section 3.2, “HR-TFT MOD Signal” on page 13
4	MOD	-	Control signal of gate driver	See Section 3.2, “HR-TFT MOD Signal” on page 13
5	U/L	-	Selection for vertical scanning direction	Connect to VSHD (top / bottom scanning)
6	SPS	FPFRAME	Start signal of gate driver	
7	CLS	GPIO1	Clock signal of gate driver	
8	VSS	-	Power supply of gate driver (logic low)	See Section 3.1, “External Power Supplies” on page 12
9	VEE	-	Power supply of gate driver (low level)	See Section 3.1, “External Power Supplies” on page 12
10	VEE	-	Power supply of gate driver (low level)	See Section 3.1, “External Power Supplies” on page 12
11	VCOM	-	Common electrode driving signal	See Section 3.1, “External Power Supplies” on page 12
12	VCOM	-	Common electrode driving signal	See Section 3.1, “External Power Supplies” on page 12
13	SPL	GPIO3	Sampling start signal for left / right scanning	
14	R0	FPDAT11	Red data signal (LSB)	
15	R1	FPDAT10	Red data signal	
16	R2	FPDAT9	Red data signal	
17	R3	FPDAT2	Red data signal	
18	R4	FPDAT1	Red data signal	
19	R5	FPDAT0	Red data signal (MSB)	
20	G0	FPDAT14	Green data signal (LSB)	
21	G1	FPDAT13	Green data signal	
22	G2	FPDAT12	Green data signal	
23	G3	FPDAT5	Green data signal	
24	G4	FPDAT4	Green data signal	
25	G5	FPDAT3	Green data signal (MSB)	

Table 3-1: S1D13706 to LQ031B1DDxx Pin Mapping (Continued)

LCD Pin No.	LCD Pin Name	S1D13706 Pin Name	Description	Remarks
26	B0	FPDAT17	Blue data signal (LSB)	
27	B1	FPDAT16	Blue data signal	
28	B2	FPDAT15	Blue data signal	
29	B3	FPDAT8	Blue data signal	
30	B4	FPDAT7	Blue data signal	
31	B5	FPDAT6	Blue data signal (MSB)	
32	VSHD	-	Digital power supply	See Section 3.1, “External Power Supplies” on page 12
33	DGND	V_{SS}	Digital ground	Ground pin of S1D13706
34	PS	GPIO0	Power save signal	
35	LP	FPLINE	Data latch signal of source driver	
36	DCLK	FPSHIFT	Data sampling clock signal	
37	LBR	-	Selection for horizontal scanning direction	Connect to VSHD (left / right scanning)
38	SPR	-	Sampling start signal for right / left scanning	Right to left scanning not supported
39	VSHA	-	Analog power supply	See Section 3.1, “External Power Supplies” on page 12
40	V0	-	Standard gray scale voltage (black)	See Section 3.1, “External Power Supplies” on page 12
41	V1	-	Standard gray scale voltage	See Section 3.1, “External Power Supplies” on page 12
42	V2	-	Standard gray scale voltage	See Section 3.1, “External Power Supplies” on page 12
43	V3	-	Standard gray scale voltage	See Section 3.1, “External Power Supplies” on page 12
44	V4	-	Standard gray scale voltage	See Section 3.1, “External Power Supplies” on page 12
45	V5	-	Standard gray scale voltage	See Section 3.1, “External Power Supplies” on page 12
46	V6	-	Standard gray scale voltage	See Section 3.1, “External Power Supplies” on page 12
47	V7	-	Standard gray scale voltage	See Section 3.1, “External Power Supplies” on page 12
48	V8	-	Standard gray scale voltage	See Section 3.1, “External Power Supplies” on page 12
49	V9	-	Standard gray scale voltage (white)	See Section 3.1, “External Power Supplies” on page 12
50	AGND	V_{SS}	Analog ground	Ground pin of S1D13706

4 Test Software

Test utilities and Windows CE display drivers are available for the S1D13706. Full source code is available for both the test utilities and the drivers.

The test utilities are configurable for different panel types using a program called 13706CFG, or by directly modifying the source. The display drivers can be customized by the OEM for different panel types, resolutions and color depths only by modifying the source.

The S1D13706 test utilities and display drivers are available from your sales support contact or www.eea.epson.com.

5 References

5.1 Documents

- Sharp Electronics Corporation, *LQ039Q2DS01 Specification*.
- Sharp Electronics Corporation, *LQ031B1DDxx Specification*.
- Epson Research and Development, Inc., *S1D13706 Hardware Functional Specification*, Document Number X31B-A-001-xx.
- Epson Research and Development, Inc., *S1D13706 Programming Notes and Examples*, Document Number X31B-G-003-xx.

5.2 Document Sources

- Sharp Electronics Corporation Website: http://www.sharpsma.com.
- Epson Electronics America Website: http://www.eea.epson.com.

6 Technical Support

6.1 EPSON LCD Controllers (S1D13706)

AMERICA

EPSON ELECTRONICS AMERICA, INC.
2580 Orchard Parkway
San Jose, CA 95131,USA
Phone: +1-800-228-3964 FAX: +1-408-922-0238

EUROPE

EPSON EUROPE ELECTRONICS GmbH
Riesstrasse 15, 80992 Munich,
GERMANY
Phone: +49-89-14005-0 FAX: +49-89-14005-110

ASIA

EPSON (CHINA) CO., LTD.
7F, Jinbao Bldg., No.89 Jinbao St.,
Dongcheng District,
Beijing 100005, CHINA
Phone: +86-10-6410-6655 FAX: +86-10-6410-7320

SHANGHAI BRANCH
7F, Block B, High-Tech Bldg., 900, Yishan Road,
Shanghai 200233, CHINA
Phone: +86-21-5423-5522 FAX: +86-21-5423-5512

SHENZHEN BRANCH
12F, Dawning Mansion, Keji South 12th Road,
Hi-Tech Park, Shenzhen 518057, CHINA
Phone: +86-755-2699-3828 FAX: +86-755-2699-3838

EPSON HONG KONG LTD.
20/F, Harbour Centre, 25 Harbour Road
Wanchai, Hong Kong
Phone: +852-2585-4600 FAX: +852-2827-4346
Telex: 65542 EPSCO HX

EPSON TAIWAN TECHNOLOGY & TRADING LTD.
14F, No. 7, Song Ren Road,
Taipei 110, TAIWAN
Phone: +886-2-8786-6688 FAX: +886-2-8786-6660

EPSON SINGAPORE PTE., LTD.
1 HarbourFront Place,
#03-02 HarbourFront Tower One, Singapore 098633
Phone: +65-6586-5500 FAX: +65-6271-3182

SEIKO EPSON CORP.
KOREA OFFICE
50F, KLI 63 Bldg., 60 Yoido-dong
Youngdeungpo-Ku, Seoul, 150-763, KOREA
Phone: +82-2-784-6027 FAX: +82-2-767-3677

SEIKO EPSON CORP.
SEMICONDUCTOR OPERATIONS DIVISION

IC Sales Dept.
IC International Sales Group
421-8, Hino, Hino-shi, Tokyo 191-8501, JAPAN
Phone: +81-42-587-5814 FAX: +81-42-587-5117

6.2 Sharp HR-TFT Panel

http://www.sharpsma.com

Change Record

X31A-G-011-05 Revision 5.1

- section 6.1 - update sales offices

X31A-G-011-05 Revision 5.0

- figure 2-3, fixed diagram so that U2[4:2] are not shown connected to U2[1]