EPSON
EXCEED YOUR VISION

S1C17801
FLS Application Note

When using the commands, follow the instructions of NOTICE_Application Notes Sample Programs.pdf being included in the downloaded compressed file.

SEIKO EPSON CORPORATION

Rev.1.0

NOTICE

No part of this material may be reproduced or duplicated in any form or by any means without the written permission of Seiko Epson. Seiko Epson reserves the right to make changes to this material without notice. Seiko Epson does not assume any liability of any kind arising out of any inaccuracies contained in this material or due to its application or use in any product or circuit and, further, there is no representation that this material is applicable to products requiring high level reliability, such as, medical products. Moreover, no license to any intellectual property rights is granted by implication or otherwise, and there is no representation or warranty that anything made in accordance with this material will be free from any patent or copyright infringement of a third party. This material or portions thereof may contain technology or the subject relating to strategic products under the control of the Foreign Exchange and Foreign Trade Law of Japan and may require an export license from the Ministry of Economy, Trade and Industry or other approval from another government agency.

All other product names mentioned herein are trademarks and/or registered trademarks of their respective companies.

©SEIKO EPSON CORPORATION 2008, All rights reserved.

OVERVIEW

This document is a reference to achieve flash erase/load programming built-in or externally connected to S1C17801 using flash memory operation command of the GNU17 development tool.

OPERATING ENVIRONMENT

・S5U1C17801T1100 (hereafter SVT17801:Software eValuation Tool for S1C17801）
  A set of SVT17801 CPU board and SVT17 ICD board (two sets as necessary)
・USB miniB cable
・PC
  Installed with GNU17 development tools
  Installed with the USB driver for the SVT17 ICD board

Table of Contents

1. SPECIFICATIONS 1
2. FUNCTIONAL DESCRIPTION 2
3. SOFTWARE DESCRIPTION 2
3.1 File layout (Built-in Flash) 2
3.2 File layout (External Flash) 2
3.3 Descriptions of the Modules 3
3.4 Global Variables 3
3.5 Error Code Definition 3
3.6 Operating Procedures 4
3.7 Detail description 4
3.8 Header Definitions 5
3.9 Creating FLS 5
REVISION HISTORY 6

1. SPECIFICATIONS

Erase and load flash memory with “c17 fls” and “c17 fle” of flash memory operation commands of the GNU17 development tool.

Flash built in S1C17801 has the dedicated Flash controller inside the chip.

The external Flash implemented in SVT17801 is SPANSION-made S29JL064H.

※ See S5U1C17001C Manual for flash memory operation commands.
※ See Flash controller of S1C17801 Technical Manual for built-in Flash.
※ See the data sheet of SPANSION-made S29JL064H for the external Flash.

The following describes the connection procedure.

When connected with SVT17801 CPU BOARD

PC (Installed with GNU17 development tools)

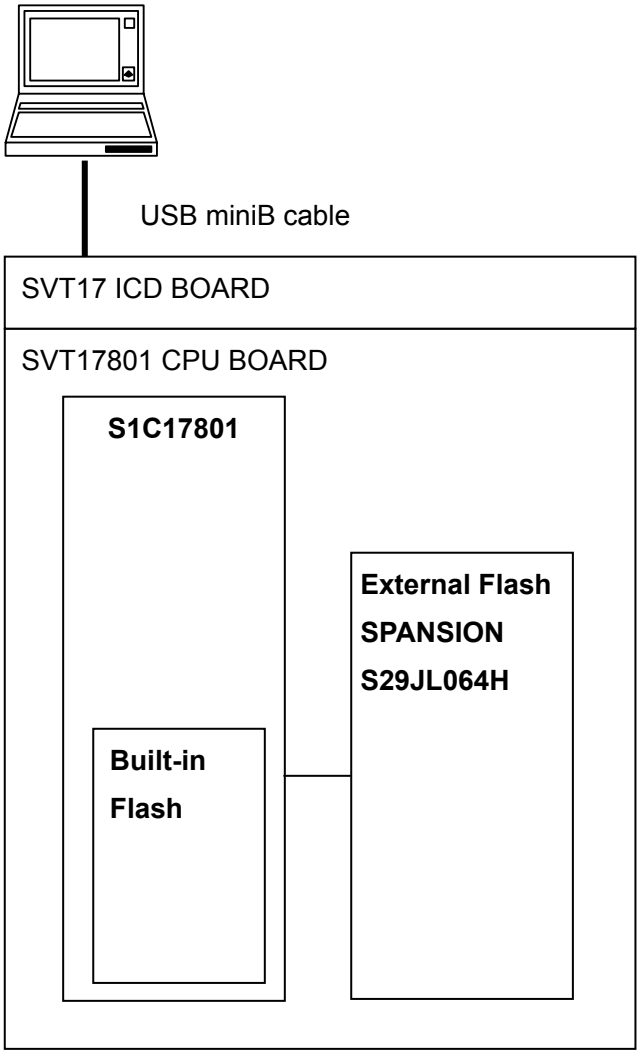

2. FUNCTIONAL DESCRIPTION

Enter a command from GDB to erase and load Flash.
Shown below is an exmaple of the built-in Flash.

```
(gdb)file FLS.elf・・・・・Read FLS debug information
(gdb)target icd usb・・・・Connect the target
(gdb)load FLS.elf・・・・・Load FLS

(gdb)c17 fls 0x20000 0x3ffff FLASH_ERASE FLASH_LOAD・・・Set Flash
(gdb)c17 fle 0x20000 11 52・・・・・・・・・・・・・・・・・・・Erase Flash
```

3. SOFTWARE DESCRIPTION

3.1 File layout (Built-in Flash)

File name	Function
drv_asm.s	GDB interface
fl_17801.c	FLS program
fl_17801.h	FLS program header file
fl_def.c	Sector information table
flashc_drv/	Built-in Flash driver folder
header/	System header folder
fls_f0a_gnu17IDE.cmd	GDB command file
fls_f0a_gnu17IDE.lds	Linker script file
fls_f0a_gnu17IDE.mak	Make file
fls_f0a_gnu17IDE.par	Parameter configuration file
.cdtproject	Project file
.gnu17project	Project file
.project	Project file
GDB17 Launch for fls_f0a.launch	Project startup file

3.2 File layout (External Flash)

File name	Function
drv_asm.s	GDB interface
fl_17801.c	FLS program
fl_17801.h	FLS program header file
fl_def.c	Sector information table
extflsc_drv/	External Flash driver folder
header/	System header folder
extfls_gnu17IDE.cmd	GDB command file
extfls_gnu17IDE.lds	Linker script file
extfls_gnu17IDE.mak	Make file
extfls_gnu17IDE.par	Parameter configuration file
.cdtproject	Project file
.gnu17project	Project file
.project	Project file
GDB17 Launch for extfls.launch	Project startup file

3.3 Descriptions of the Modules

File name: drv_asm.s

Function name	Function
FLASH_ERASE	Passes arguments to flash_erase and calls it.
FLASH_LOAD	Passes arguments to flash_load and calls it.

This source file contains codes for the debugger interface with GNU17.

Codes are common regardless of internal/external Flash. If you modify these codes, you may not communicate with GDB.

3.4 Global Variables

This section describes global variables used in programs.

Variable name	Type	Function
g_ControlReg	unsigned long	Keeping control registers (Flash start address)
sSector[FLS_SCTMAX]	unsigned long	Flash sector information table

3.5 Error Code Definition

Definition name	Value	Description
FLS_E_SUCCESS	0	Successful flash memory operation (Normal termination)
FLS_E_VERIFY	1	Verify error
FLS_E_PARAM1	3	Out of range for data erase start sector
FLS_E_PARAM2	4	Out of range for data erase end sector
FLS_E_CHANGE	5	Control register change
FLS_E_REGERR	6	Start address error

3.6 Operating Procedures

Import the project
(1) Launch the IDE and import the "fls_f0a" or "extfls" project.
※ For the import procedure, refer to S5U1C17001C Manual "3. Software Development Procedure."

Build
(1) Build the "fls_f0a" or "extfls" project by using the IDE.
(2) Change the name of "fls_f0a.elf" or "extfls.elf" created as required.

Run the program
(1) Launch the GDB.
(2) Execute "file xxxxx.elf". "xxxxx.elf" is the name created by Build (2).
(3) Execute "target icd usb" to connect the target.
(4) Load FLS with "load xxxxx.elf".
(5) Set FLS with "c17 fls 0x20000 0x3ffff FLASH_ERASE FLASH_LOAD".
(6) Execute "c17 fle 0x2000000".
(7) Check that the memory (0x20000 to 0x3ffff) is filled with "FF" on the Memory Window.
(8) Execute "load YYYYY.elf". YYYYY.elf is the object file assigned to 0x20000.
(9) Check that codes are loaded from 0x20000 on the Memory Window.

※Addresses from (5) to (8) are those of the internal Flash. You need to specify an external Flash address for an external Flash.
※See S5U1C17001C Manual for commands of "c17 fls" and "c17 fle".

3.7 Detail description

The following lists the functions described in the file named fl_17801.c.

Flash Erase

Format	int flash_erase(unsigned long controlReg, unsigned long start, unsigned long end)		
Function	Erases Flash		
Argument	controlReg	-in	Flash start address
	start	-in	Erase start block number
	end	-in	Erase end block number
Return value	FLS_E_SUCCESS	Successful flash memory operation (Normal termination)	
	FLS_E_VERIFY	Verify error	
	FLS_E_PARAM1	Out of range for data erase start sector	
	FLS_E_PARAM2	Out of range for data erase end sector	
	FLS_E_CHANGE	Control register change	
	FLS_E_REGERR	Start address error	

(Description)
This function erases flash memory data according to the parameters specified for the argument.
(1) Check if the argument is correct.
(2) If "start" and "end" are 0, call the Flash driver for Chip erase.
(3) If "start" and "end" are not 0, call the Flash driver for Sector erase.
(4) Return a return value.

※ See the FLASHC/EXTFLSC application note for the Flash driver.

Flash Load

Format	int flash_load(unsigned long address, unsigned long size, unsigned long dummy)
Function	Flash erase
Argument	address -in Load address size -in Load data size dummy -in dummy(not used)
Return value	FLS_E_SUCCESS Successful flash memory operation (Normal termination) FLS_E_VERIFY Verify error FLS_E_REGERR Start address error
(Description) This function loads data in the flash memory according to the parameters specified for the argument. (1) Check if the argument is correct. (2) Pad the load address in an even address. (3) Receive data sent from ICD with a debugging register. (4) Pad the received data size to an even number. (5) Call the Flash driver to load data. (6) Return a return value. ※ See the FLASHC/EXTFLSC application note for the Flash driver.	

3.8 Header Definitions

The table below lists the definitions used in the driver functions.

Definition name	Value	Description
DSIO_STS	0xffffc0	Serial Status Register
DSIO_DAT	0xffffc2	Serial Transmit/Receive Data Register
FLS_SCTMAX	Dependent on Flash	Maximum number of Flash sectors
FLS_E_SUCCESS	0	Successful flash memory operation (Normal termination)
FLS_E_VERIFY	1	Verify error
FLS_E_PARAM1	3	Out of range for data erase start sector
FLS_E_PARAM2	4	Out of range for data erase end sector
FLS_E_CHANGE	5	Control register change
FLS_E_REGERR	6	Start address error

※ See S1C17 core manual for “Serial Status Register” and “Serial Transmit/Receive Data Register”.

3.9 Creating FLS

Create FLS according to the following steps.
(1) Modify the sector table of “fl_def.c” to fit the employed Flash.
(2) Create a Flash driver to fit the employed Flash.
(3) Change the Flash driver called in “fl_17801.c” to the one created in step (2).

REVISION HISTORY

Date	revision	modification	note
08/04/30	1.0	New issue	

EPSON

International Sales Operations

AMERICA

EPSON ELECTRONICS AMERICA, INC.
HEADQUARTERS
2580 Orchard Parkway
San Jose , CA 95131,USA
Phone: +1-800-228-3964 FAX: +1-408-922-0238

SALES OFFICES
Northeast
301 Edgewater Place, Suite 210
Wakefield, MA 01880, U.S.A.
Phone: +1-800-922-7667 FAX: +1-781-246-5443

EUROPE

EPSON EUROPE ELECTRONICS GmbH
HEADQUARTERS
Riesstrasse 15 Muenchen Bayern,
80992 GERMANY
Phone: +49-89-14005-0 FAX: +49-89-14005-110

ASIA

EPSON (CHINA) CO., LTD.
7F, Jinbao Bldg.,No.89 Jinbao St.,
Dongcheng District,
Beijing 100005, China
Phone: +86-10-6410-6655 FAX: +86-10-6410-7320

SHANGHAI BRANCH
7F, Block B, Hi-Tech Bldg., 900, Yishan Road,
Shanghai 200233, CHINA
Phone: +86-21-5423-5522 FAX: +86-21-5423-5512

EPSON HONG KONG LTD.
20/F., Harbour Centre, 25 Harbour Road
Wanchai, Hong Kong
Phone: +852-2585-4600 FAX: +852-2827-4346
Telex: 65542 EPSCO HX

EPSON (CHINA) CO., LTD.
SHENZHEN BRANCH
12/F, Dawning Mansion, Keji South 12th Road,
Hi- Tech Park, Shenzhen
Phone: +86-755-2699-3828 FAX: +86-755-2699-3838

EPSON TAIWAN TECHNOLOGY & TRADING LTD.
14F, No. 7, Song Ren Road,
Taipei 110
Phone: +886-2-8786-6688 FAX: +886-2-8786-6660

EPSON SINGAPORE PTE., LTD.
1 HarbourFront Place,
#03-02 HarbourFront Tower One, Singapore 098633
Phone: +65-6586-5500 FAX: +65-6271-3182

SEIKO EPSON CORPORATION
KOREA OFFICE
50F, KLI 63 Bldg., 60 Yoido-dong
Youngdeungpo-Ku, Seoul, 150-763, KOREA
Phone: +82-2-784-6027 FAX: +82-2-767-3677

GUMI OFFICE
2F, Grand B/D, 457-4 Songjeong-dong,
Gumi-City, KOREA
Phone: +82-54-454-6027 FAX: +82-54-454-6093

SEIKO EPSON CORPORATION
SEMICONDUCTOR OPERATIONS DIVISION

IC Sales Dept.
IC International Sales Group
421-8, Hino, Hino-shi, Tokyo 191-8501, JAPAN
Phone: +81-42-587-5814 FAX: +81-42-587-5117

Document Code: 411446700
First Issue March 2008 in JAPAN Ⓗ