EPSON
EXCEED YOUR VISION

S1C17W14/W16
EL Lamp
Application Notes

SEIKO EPSON CORPORATION

Rev. 1.1

Evaluation board/kit and Development tool important notice

1. This evaluation board/kit or development tool is designed for use for engineering evaluation, demonstration, or development purposes only. Do not use it for other purpose. It is not intended to meet the requirement of design for finished product.
2. This evaluation board/kit or development tool is intended for use by an electronics engineer, and it is not the product for consumer. The user should use this goods properly and safely. Seiko Epson dose not assume any responsibility and liability of any kind of damage and/or fire coursed by usage of it. User should cease to use it when any abnormal issue occurs even during proper and safe use.
3. The part used for this evaluation board/kit or development tool is changed without any notice.

NOTICE

No part of this material may be reproduced or duplicated in any form or by any means without the written permission of Seiko Epson. Seiko Epson reserves the right to make changes to this material without notice. Seiko Epson does not assume any liability of any kind arising out of any inaccuracies contained in this material or due to its application or use in any product or circuit and, further, there is no representation that this material is applicable to products requiring high level reliability, such as, medical products. Moreover, no license to any intellectual property rights is granted by implication or otherwise, and there is no representation or warranty that anything made in accordance with this material will be free from any patent or copyright infringement of a third party. When exporting the products or technology described in this material, you should comply with the applicable export control laws and regulations and follow the procedures required by such laws and regulations. You are requested not to use, to resell, to export and/or to otherwise dispose of the products (and any technical information furnished, if any) for the development and/or manufacture of weapon of mass destruction or for other military purposes.

All brands or product names mentioned herein are trademarks and/or registered trademarks of their respective companies.

©SEIKO EPSON CORPORATION 2016, All rights reserved.

Summary

This document is intended to provide a reference document in order to generate signals for an EL lamp driver in S1C17W14/W16 by using IR remote controller (REMC2) and turn on the EL lamp.

Operating Environment

- The target board that S1C17W14 or S1C17W16 was implemented.
  A dedicated cable is necessary to connect to ICDmini.
- PC
  - GNU17 (S5U1C17001C) development tool already installed*
  - ICDmini USB driver already installed
- ICDmini (S5U1C17001H)
  A USB cable is necessary to connect to PC.
- Programming package (this package) for S1C17W14/W16 EL lamp driver

* Note: This package has been evaluated in GNU17 v2.4.0/v3.0.5.

Table of Contents

Summary i
1. Specification 1
2. Feature Description 2
3. Operating Principle 3
4. Software Description 6
4.1 File Configuration 6
4.2 Module Description 6
4.3 Global Variable 7
4.4 Compile Switch 7
4.5 Operating Procedures 8
4.6 Sample Program Operation Overview 10
4.7 Parameters and Output Waveforms 12
APPENDIX A. Experiment Example to Turn on EL Lamp 14
Revision History 16

1. Specification

In this application notes, the signals for the EL lamp driver are generated by using an IR remote-controller (REMC2) built in S1C17W14/W16. The signals generated for the EL lamp driver are input into high voltage DC-DC converter circuit mounted on a separate board to generate high voltage to turn on the EL lamp.

This sample programs runs in order to set wave conditions for EL drive signals and to generate signals for the EL lamp driver for one of turn-off/turn-on/blink operation modes.

2. Feature Description

Output pin	REMC2's REMO: CHG signal (for generating charging pulses) REMC2's CLPLS: DIS signal (for generating discharging pulses)
Operation mode	It outputs a signal for EL lamp drivers without interposition of the software.
System clock	The system clock uses OSC1 (32.768kHz).
Interrupt	The REMC2's vector number and vector address are as follows: REMC2 Vector No.: 18(0x12) Vector address: 0x8048 This sample uses the following type of interrupts. - Compare DB interrupt

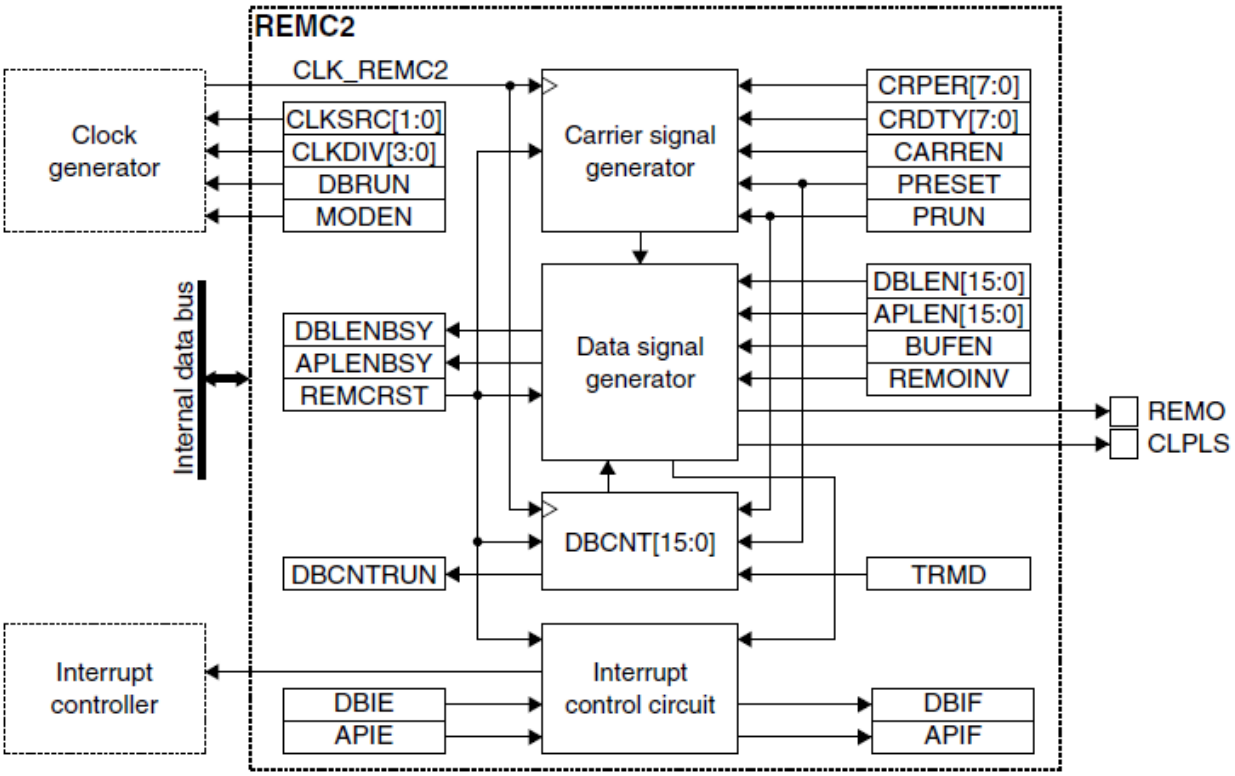

Figure 1 REMC2 configuration

3. Operating Principle

(1) EL

EL stands for Electro-Luminescence, a luminous phenomenon caused when a substance is excited by energy. The phenomenon is called luminescence that emits the energy as light which a fluorescent substance received from excitation source. The luminescence is, according to types of excitation sources, classified into electro-luminescence (EL) excited by electric field, photo-luminescence (PL) excited by light, and cathode-luminescence (CL) excited by electron beam.

EL is classified into injection and intrinsic ELs according to luminescent principle. And, strictly speaking, intrinsic EL may be called EL. The injection EL (distributed EL) emits light when electrons and holes injected into semiconductor element recombine near the junction surface by applying a voltage to electric field. The light emitting diode (LED) is an example of injection EL. The intrinsic EL (thin film EL) emits light when electrons accelerated by electric field collide with luminescent center and luminescent center is excited in semiconductor element. The thin film EL element is classified into this.

The thin film EL elements are characterized by the fact that they emit light evenly and extensively over the entire surface of luminous plate of approximately 0.5mm thickness. The study of EL for lighting use and EL display is growing. The EL which uses organic substance including diamines as a luminous object is called organic EL and the EL which uses inorganic substance including zinc sulfide is called inorganic EL.

The organic EL emits light at 5 to 10 VDC, but inorganic EL needs 50 to 200 VAC. This application notes describe how to generate necessary high voltage AC in order for inorganic EL to emit light.

(2) Principle of high voltage DC-DC converter

The high voltage to activate EL is generated by applying driving waveform shown in Figure 3 to high voltage DC-DC converter circuit shown in Figure 2. In particular, two operating phases are repeated: the phase charging the EL lamp EL1 with high voltage generated in coil L1 by inputting CHG signals (signals for generating charging pulses) and the phase discharging the EL lamp EL1 by inputting DIS signals (signals for generating discharging pulses).

Deliberately select the inductance of coil L1 and frequency of charge waveform input into CHG so that the luminescence intensity of EL lamp EL1 is maximized.

When the current flowing in coil L1 increases from zero to I [A], the energy U [J] stored in coil L1 can be derived from the equation below based on the self-induction principle:

$$U = \frac{1}{2} LI^2 \quad \cdots\cdots \quad (1) \qquad\qquad I = \frac{Vcc - IR - V_{Q1}}{R} \quad \cdots\cdots \quad (2)$$

Where, L is the inductance of coil L1, R is the resistance of coil L1, VQ1 is voltage between the collector and emitter when transistor Q1 is turned on.

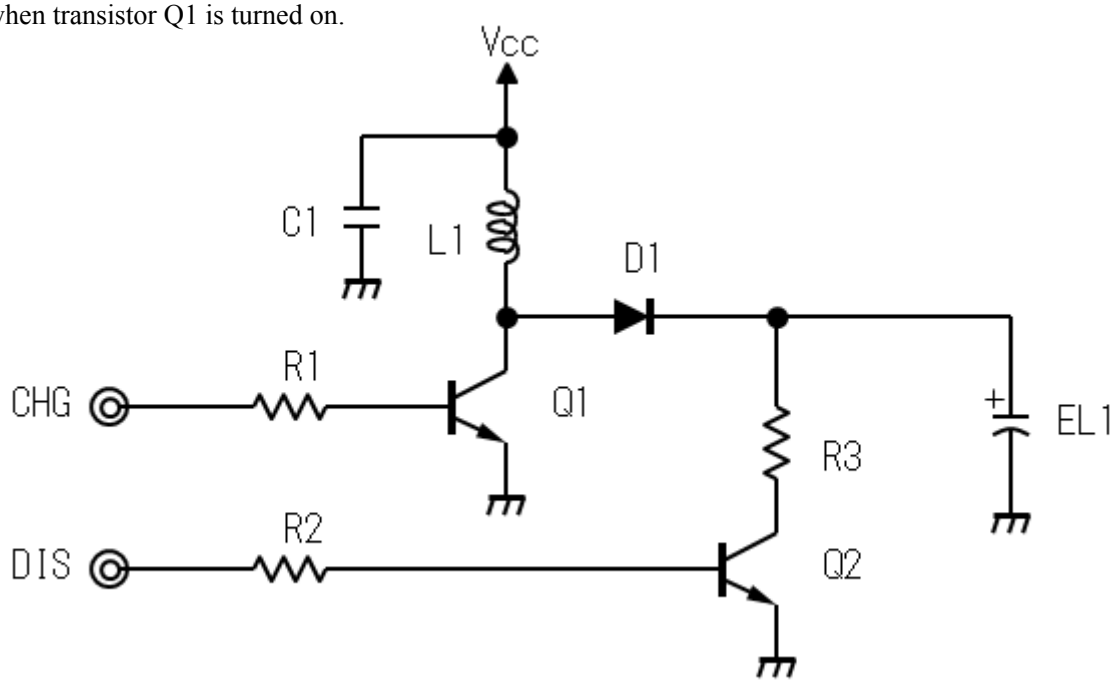

Figure 2 High voltage DC-DC converter circuit

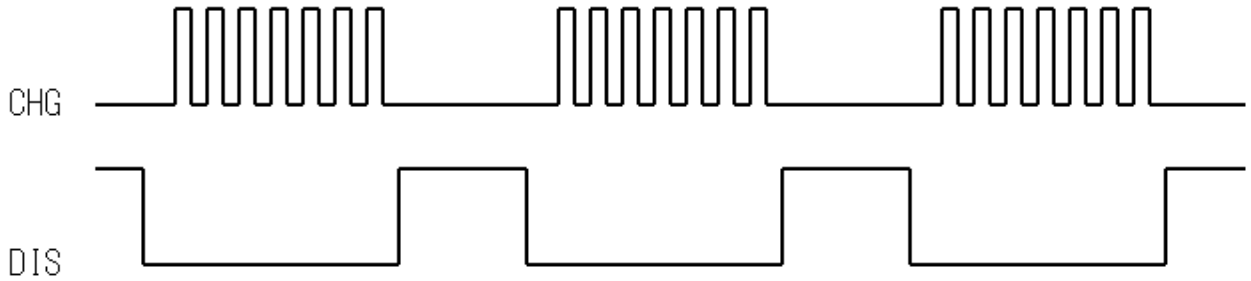

Figure 3 Driving waveform of high voltage DC-DC converter

As shown in this equation, in order to maximize the energy generated from coil L1, it is necessary to increase supply voltage Vcc as much as possible and reduce resistance R of coil L1 as low as possible.

The current flowing in a coil changes according to time and is determined by the turn-on time tON of a switch between the coil and power source as shown in the equation below:

$$I = \frac{V_L}{L} \cdot t_{ON} \quad \cdots\cdots \quad (3)$$

Where, VL is the voltage applied to coil L1.

The current I flowing in a coil is zero at the moment when the switch is closed, and the voltage Vcc-VQ1 is applied to the coil. The current flowing in the coil increases linearly according to time from the switch-on. As the current flowing in the coil increases, the voltage applied to the inductor decreases due to the resistance of coil and switch's on-resistance, as shown in the equation 4 below:

$$V_L = V_{CC} - IR - V_{Q1} \quad \cdots\cdots \quad (4)$$

Thus, in order to generate high voltage for activating EL lamp without loss, it is necessary to select those high-voltage transistors and diodes which are sufficient for the drive voltage.

4. Software Description

4.1 File Configuration

File name	Function
inc/reg	The header file which defined the bit assignment every peripheral circuits
inc/c17w14_reg.h inc/c17w16_reg.h	Header files for peripheral unit
src/crt0.h	Boot processing definition file (for GNU17 Version 3)
src/init.h	Header file for the initialize function
src/remc2.h	Header file for REMC2 function
src/t16_ch0.h	Header file for T16 Ch.0 function
src/boot.c	Startup module
src/init.c	Initialize function file
src/main.c	Main function
src/remc2.c	REMC2 function file
src/t16_ch0.c	T16 Ch.0 function file

4.2 Module Description

This section describes non-generic setting mainly of function names and functions out of all modules in the files.

File name: remc.c

Function name	Function
initRemc	Initializes REMC2.
startRemc	Activates REMC2.
stopRemc	In order to stop the REMC2 operation when a compare DB interrupt occurs, sets the flag to stop the REMC2 operation.
intRemc	REMC2 interrupt handler. Checks whether the flag is set to stop the REMC2 operation when a compare DB interrupt is received. If the flag is set, sets the flag to processed to stop its operation.

File name: t16_ch0.c

Function name	Function
initT16Ch0	Initializes T16 Ch0.
startT16Ch0	Starts T16 Ch0.
stopT16Ch0	Stop movement of T16 Ch.0.
presetT16Ch0Count	Pre-set a counter level of T16 Ch.0.
getT16Ch0Count	Gets and returns a counter value of T16 Ch0.
intT16Ch0	T16 Ch0 interrupt handler. In particular, handles the blink operation in a blinking mode.

4.3 Global Variable

This section describes global variables used in the sample program.

Variable name	Type	Function
mode	unsigned short	Choice of the operation mode. Initial value is EL_LAMP_MODE=2 0: always turn-off, 1: continuous turn-on, 2: blink
remcRunning	unsigned short	Stores current operation status for the REMC2's stop request. 0: stop requesting, 1: running, 2: stop completed.
blink	unsigned short	In order to change blinking operation, stores whether it lights up or not at present. 0: turned off, 1: turned on.

4.4 Compile Switch

This section describes compile switches used in the sample program.

Switch a definition in main.c to change always turn-off, continuous turn-on, or blink mode.

Variable name	Function
EL_LAMP_MODE	0: always turn-off, 1: continuous turn-on, 2: blink.

The blink frequency can be changed with the parameter BLINK_INTERVAL_COEF in t16_ch0.c, and the value can be calculated in the equation below (unit: second).

Turn-off time = Turn-on time = BLINK_INTERVAL_COEF / 32768

That is, if BLINK_INTERVAL_COEF = 16384 by default, EL lamp repeats to turn on/off in 0.5 sec cycle.

4.5 Operating Procedures

The sample software includes two projects for GNU17 Version 2 (hereinafter referred to as GNU17v2) and GNU17 Version 3 (hereinafter referred to as GNU17v3), and two header file sets for S1C17W14 and S1C17W16.

Before the sample software for GNU17v2 or GNU17v3 can be used, configure the target model by following the procedure shown below.

(1) Copy the header files for the target model to be used to the inc folder of the sample software.

Example: If the target model is S1C17W14, copy the c17w14_reg.h file and the reg folder to the inc subfolder in the s1c17w14_w16_remc2_EL_gnu17vx folder of the sample software.

(2) Select [Import...] from the [File] menu to start the Import Wizard, then select

[General] > [Existing Project to Workspace] (GNU17v2) or

[General] > [Existing Projects into Workspace] (GNU17v3).

(3) Select the project folder that contains the sample program:

s1c17w14_w16_remc2_EL_gnu17v2 folder (GNU17v2) or

s1c17w14_w16_remc2_EL_gnu17v3 folder (GNU17v3).

(4) Select [Copy projects into workspace] and then click the [Finish] button to exit the Import Wizard.

(5) Change the target CPU.

(GNU17v2)

1. Select the imported project in the [C/C++ project] view and select [Properties] from the [Project] menu.
2. Select [GNU17 General] from the property list in the [Properties] dialog box that appears.
3. Select the target CPU from the [Target CPU Device] drop-down list.
4. Click the [Apply] button.

(GNU17v3)

1. Select the imported project in the [Project Explorer] view and select [Properties] from the [Project] menu.
2. Select [GNU17 Setting] from the property list in the [Properties] dialog box that appears.
3. Select the target CPU from the [Target CPU] drop-down list.
4. Click the [OK] button to close the dialog box. Then, go to Step (7).

(6) Set the debugger's startup options. (GNU17v2 only)

1. Select [GNU17 GDB Commands] from the property list.
2. Click the [Create commands from template] button to display the [Create a simple startup command] dialog box.
3. Select "ICD Mini" from the [Debugger:] drop-down list and select [Execute flash ROM writing].
4. Click the [Overwrite] button to close the dialog box. Close the [Properties] dialog box as well.

(7) Edit the init.h header file that exists in the src folder of the project to change the target model defined.

Example: When the target is S1C17W14

```
#define MCUSEL_C17W14        /// S1C17W14
//#define MCUSEL_C17W16      /// S1C17W16
```

(8) Build the project.

Use IDE to build the s1c17w14_w16_remc2_EL_gnu17vx project.

(9) Connect the equipment and turn on the power.

1. Connect high voltage DC-DC converter, target board with S1C17W14 or S1C17W16 mounted, ICDmini, USB cable, and PC.
2. Reset the target board and ICDmini.

(10) Run the sample software.

1. Use IDE to run the s1c17w14_w16_remc2_EL_gnu17vx project.
2. After starting s1c17w14_w16_remc2_EL_gnu17vx, the EL lamp blinks.

4.6 Sample Program Operation Overview

(1) Initialize the system.

(2) Change the system clock to OSC1 and stop IOSC.

(3) The subsequent operations change according to the variable "mode."
If mode = 0, REMC2 stops the operation and stops at a HALT loop. The EL lamp remains turned off.
If mode = 1, REMC2 starts the operation and stops at a HALT loop. But, the EL lamp remains turned on.
If mode = 2, REMC2 blinks. This is because T16 Ch0 is repeatedly interrupted at a certain period of time to switch REMC2 between the start and stop.
The mode value can be changed interactively by setting a break point in row 95 in main.c, a row just after a value is set for the mode. After the reset, since the program pauses at the row, change the mode to a desired value in Watch Expressions window and continue the program in Continue.

The figure below shows the flow chart:

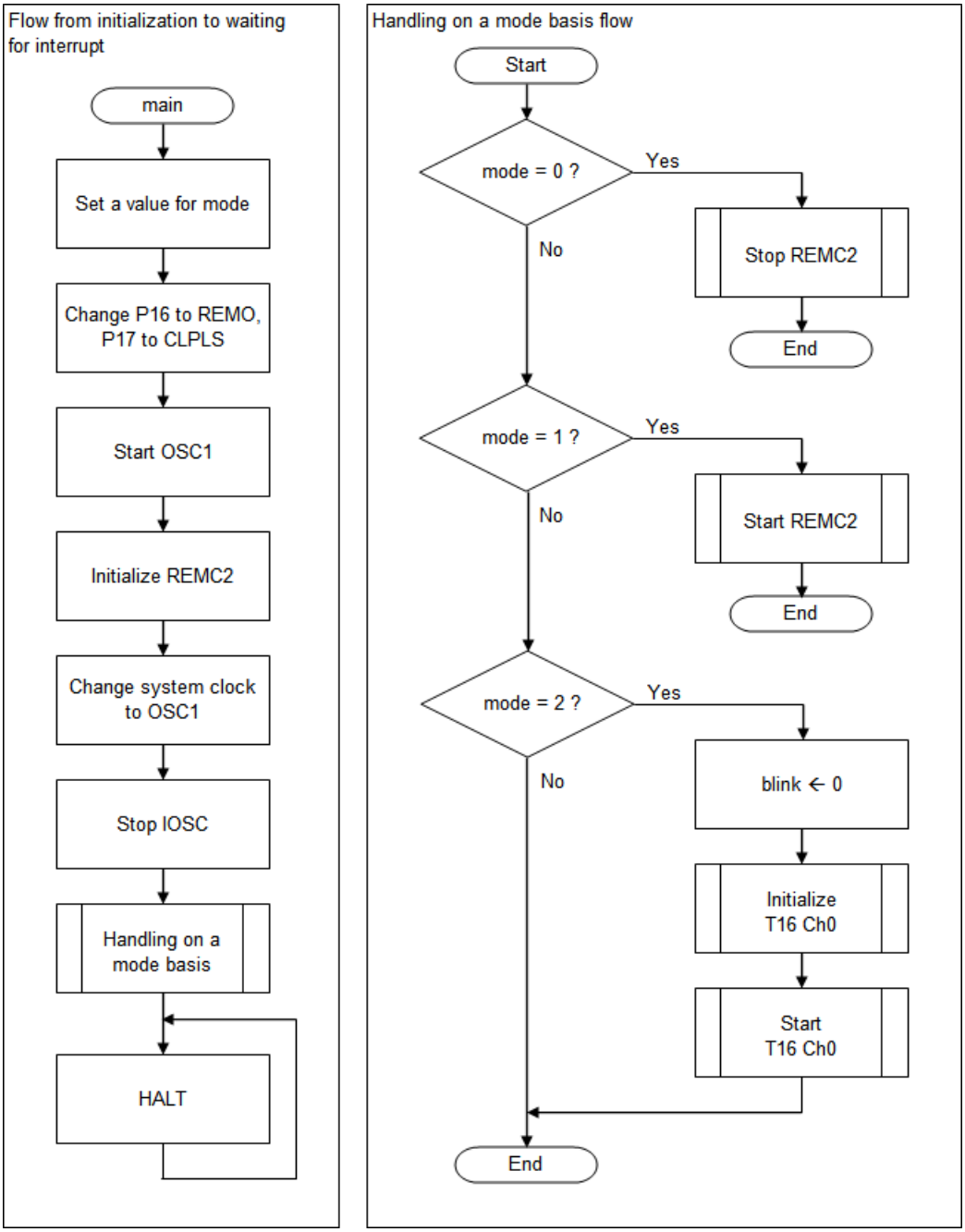

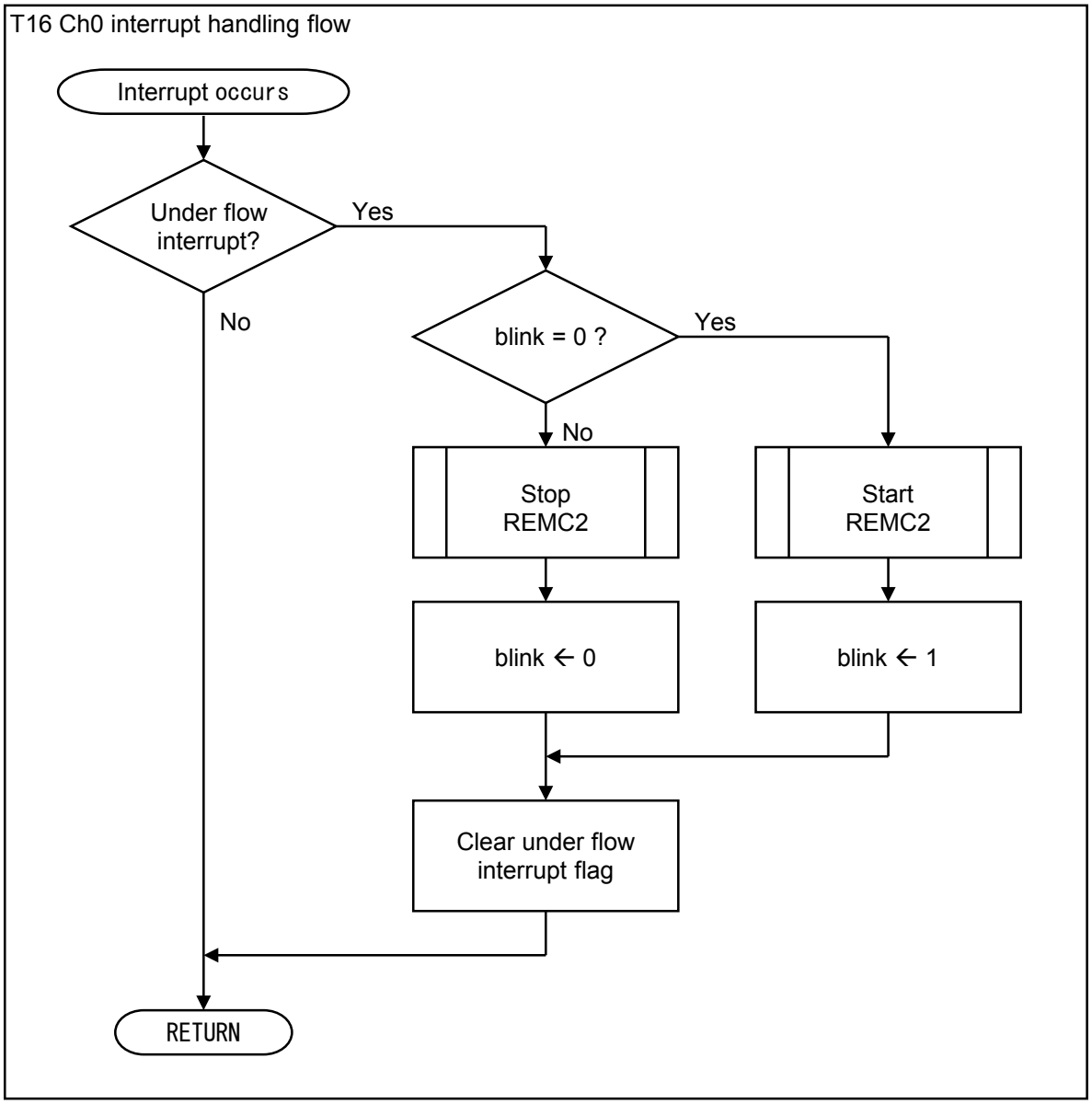
T16 Ch0 interrupt handling flow
Interrupt occurs
Under flow interrupt?
Yes
No
blink = 0 ?
Yes
No
Stop REMC2
Start REMC2
blink ← 0
blink ← 1
Clear under flow interrupt flag
RETURN

4.7 Parameters and Output Waveforms

The file main.c defines constants to determine output waveforms. These constants can change the count values of REMC2's timer as shown in the table below:

Definition name	Setup counter
CLPLS_CYCLE	REMC2's (DBLEN+1) = cycle length of CLPLS output
CHG_PERIOD	REMC2's (APLEN+1) = "low" level period of CLPLS output = The period when REMO pulse is output
REMO_CYCLE	REMC2's (CRPER+1) = REMO output period
REMO_HI	REMC2's (CRDTY+1) = "high" level period of CLPLS output

The REMC2's REMO output is for the CHG signal and the CLPLS output is for the DIS signal.

The figure below shows the waveforms for the REMO and CLPLS output when the MCU's clock frequency φ = 32.768 kHz.

① = CLPLS_CYCLE / φ

② = CHG_PERIOD / φ

③ = REMO_CYCLE / φ

④ = REMO_HI / φ

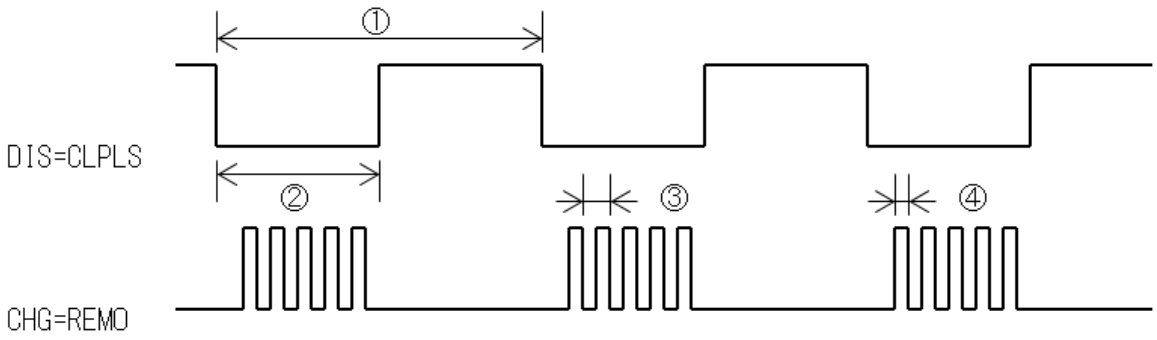

Figure 4 Relationship between output signal waveform and parameter

It is recommended to determine the definition values by checking waveforms with an oscilloscope lest disadvantageous waveforms including beard-like waveform are generated.

Note that the REMC2 setting can be changed interactively by pausing the program, changing the registers to desired values in the Memory window, and continue the program in Continue. Repeat this to easily find optimum condition. However, a pause may set both CLPLS and REMO signal output to "H" at the same time so that a high current flows through high voltage DC-DC converter drive circuit. So, set a limit of about 100 mA for the power supply.

APPENDIX A. Experiment Example to Turn on EL Lamp

This chapter describes an example which examined how the brightness and various characteristics of an EL lamp may actually change according to waveforms.

Now, we have examined the change of luminescence intensity of the EL lamp caused by the change of waveforms by using BOM components listed in Table 1 in the high voltage DC-DC converter circuit shown in Figure 2, so we determined two typical conditions for evaluation.

Table 1 BOM of high voltage DC-DC converter circuit shown in Figure 2

Name	Symbol	Manufacturer	Product number	Specification
EL Lamp	EL1	-	-	Custom-made
Transistor	Q1	Micro Commercial Co.	MMBT5551-TPCT-ND	Ic=600mA, Vceo=160V
	Q2			
Diode	D1	ON Semicon.	BAS21LT3GOSCT-ND	250V, 200mA
Inductor	L1	Abracon Corporation	ASPI-0403S-332M-T	3.3mH, 80mA, R_{DC}<=11Ω
Capacitor	C1	muRata	GRM32EF10J107E20	100uF/6.3V, T=2.7mm, Tol=F
Resistor	R1	ROHM	MCR01 Series	560Ω,Size=1005(0402),Tol=F
	R2			220kΩ,Size=1005(0402),Tol=F
	R3			22kΩ,Size=1005(0402),Tol=F

Table 2 lists the meaning of symbols below:

Table 2 Description of symbols

Symbol	Meaning
Vpeak	Peak voltage value applied to the EL lamp.
Imeas	Total current flowing in the driver circuit (Vcc in Figure 2) and S1C17W14/W16.
Irradiate	Measured illuminance of luminescent EL surface. (Diameter of area is 2 deg.)
Efficacy	Value of the illuminance divided by Vcc multiplied by Imeas.

Figure 5 shows the dependency of various characteristics on applied voltage when using setting values under two typical conditions.

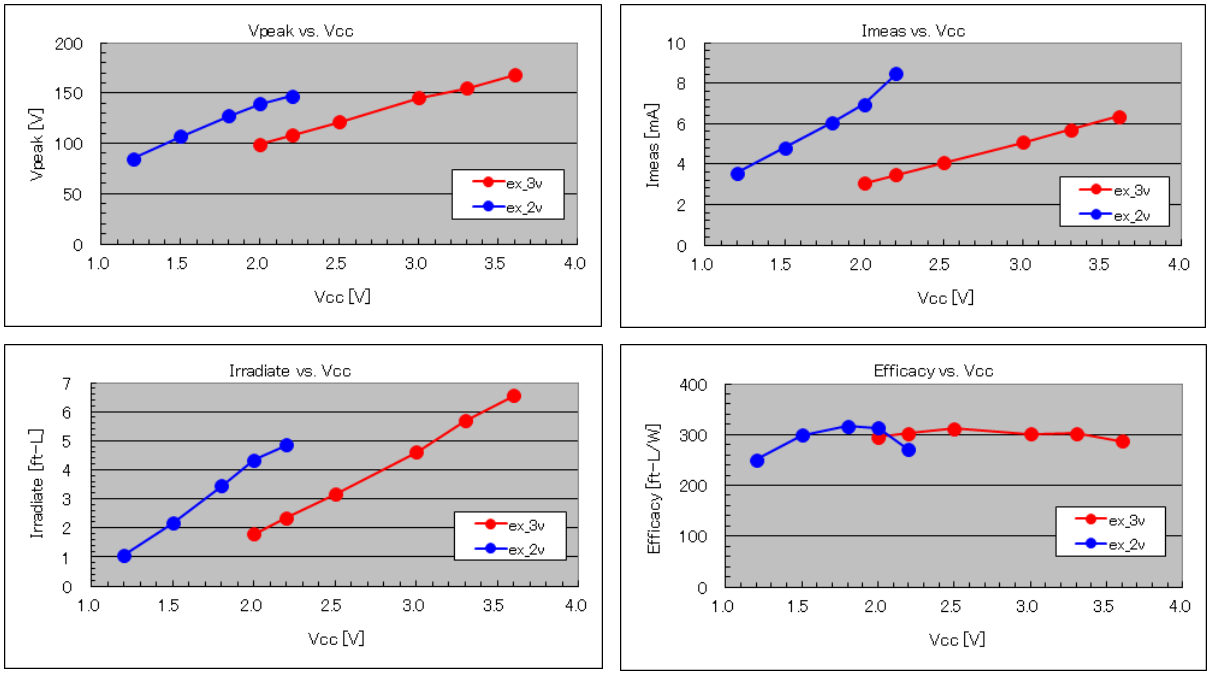

Figure 5 Dependency of various characteristics on applied voltage under two typical conditions

In addition, the meters used in the experiment are as follows:

- luminance meter: Topcon Luminance Colorimeter BM-7
- Ammeter: Agilent, 34401A, 6 1/2 Digit Multimeter
- Oscilloscope: Tektronix TDS3014
- Stabilized power supply: HP E3631A, DC Power Supply

Finally, Figure 6 shows how the lamp emits light when the supply voltages (3.0V, 2.0V) are applied under two typical conditions.

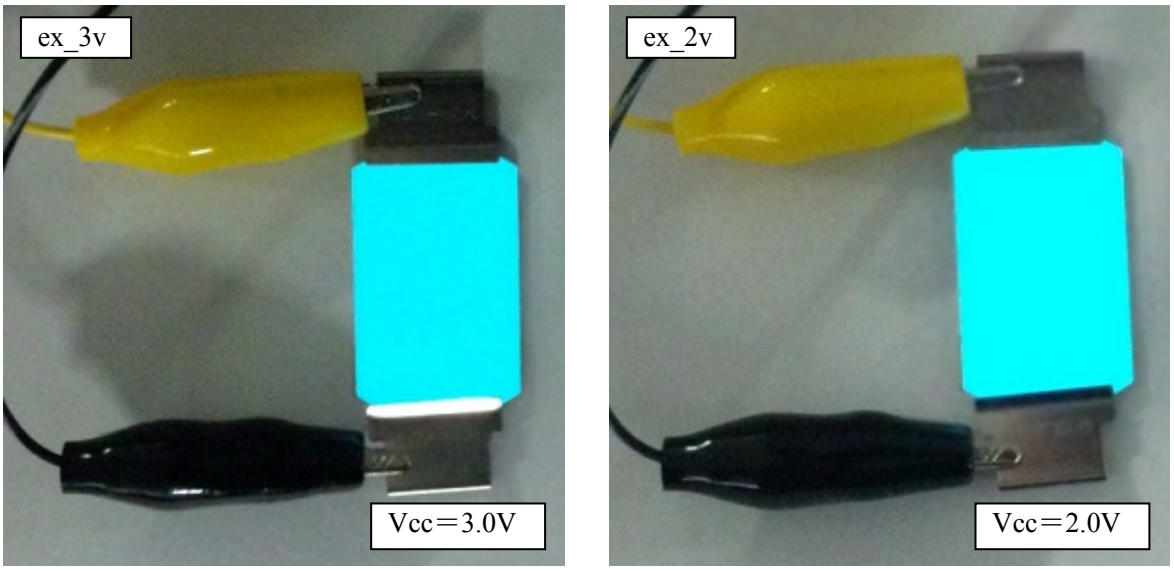

Figure 6 How EL lamp emits light under two typical conditions

Revision History

Attachment-1

Rev. No.	Date	Page	Category	Contents
Rev. 1.0	2014/1/30	All	new	
Rev. 1.1	2016/3/29	i, 8, 10, 11	Addition	Descriptions for the contents that were added or modified to support the new operating environment (GNU17 Ver. 3) have been appended.

EPSON

International Sales Operations

AMERICA

EPSON ELECTRONICS AMERICA, INC.
214 Devcon Drive,
San Jose, CA 95112, USA
Phone: +1-800-228-3964 FAX: +1-408-922-0238

EUROPE

EPSON EUROPE ELECTRONICS GmbH
Riesstrasse 15, 80992 Munich,
GERMANY
Phone: +49-89-14005-0 FAX: +49-89-14005-110

ASIA

EPSON (CHINA) CO., LTD.
7F, Jinbao Bldg., No.89 Jinbao St.,
Dongcheng District,
Beijing 100005, CHINA
Phone: +86-10-8522-1199 FAX: +86-10-8522-1125

SHANGHAI BRANCH
7F, Block B, Hi-Tech Bldg., 900 Yishan Road,
Shanghai 200233, CHINA
Phone: +86-21-5423-5577 FAX: +86-21-5423-4677

SHENZHEN BRANCH
12F, Dawning Mansion, Keji South 12th Road,
Hi-Tech Park, Shenzhen 518057, CHINA
Phone: +86-755-2699-3828 FAX: +86-755-2699-3838

EPSON TAIWAN TECHNOLOGY & TRADING LTD.
14F, No. 7, Song Ren Road,
Taipei 110, TAIWAN
Phone: +886-2-8786-6688 FAX: +886-2-8786-6660

EPSON SINGAPORE PTE., LTD.
1 HarbourFront Place,
#03-02 HarbourFront Tower One, Singapore 098633
Phone: +65-6586-5500 FAX: +65-6271-3182

SEIKO EPSON CORP.
KOREA OFFICE
19F, KLI 63 Bldg., 60 Yoido-dong,
Youngdeungpo-Ku, Seoul 150-763, KOREA
Phone: +82-2-784-6027 FAX: +82-2-767-3677

SEIKO EPSON CORP.
MICRODEVICES OPERATIONS DIVISION

Device Sales & Marketing Department
421-8, Hino, Hino-shi, Tokyo 191-8501, JAPAN
Phone: +81-42-587-5816 FAX: +81-42-587-5117

Document Code: 412687602
First Issue January 2014 Ⓥ
Revised April 2016 in JAPAN