S1C31W73 MCU

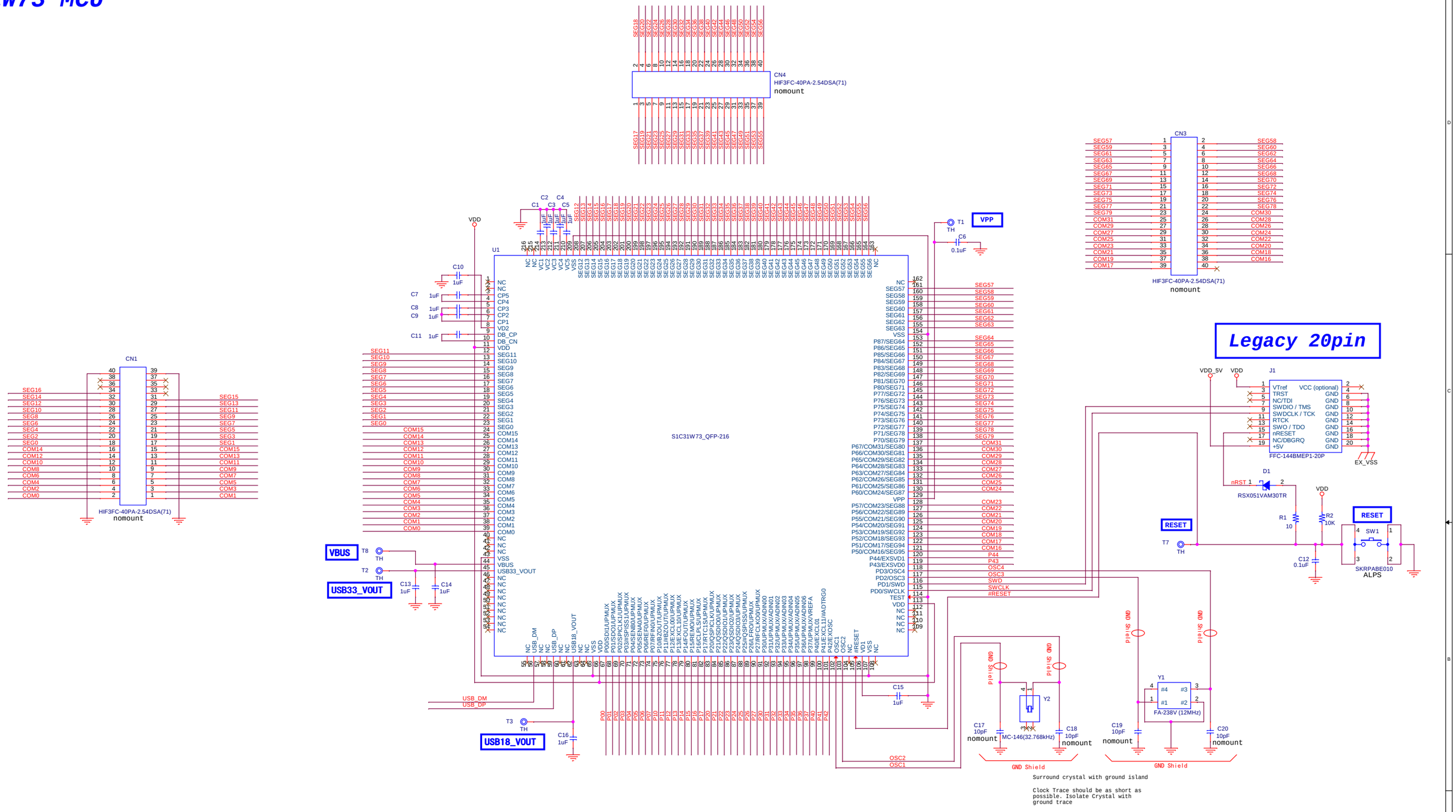

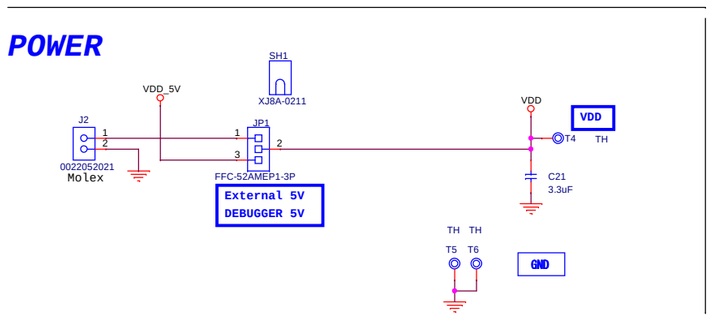

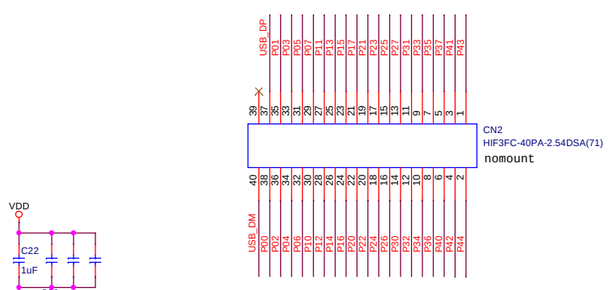

EPSON IC Products Department	
Title	S1C31W73 SVT Board
Size A2	Document Number <Doc>
Rev	<RevCode>
Date: Tuesday, May 28, 2019	Sheet 2 of 2