# Tiny Size MHz range crystal unit:
# Product Name: FA1008AN

## Features

- Package size: 1.0 x 0.8 mm t = 0.3 mm Max.
- Frequency range: 40 MHz to 100 MHz
  (Currently avail: 52 MHz, 59.97 MHz)
- Frequency tolerance: ±10 x $10^{-6}$ (+25 °C)
- Frequency vs. temperature characteristics:
  ±10 x $10^{-6}$ (-20 to +75 °C)
  ±15 x $10^{-6}$ (-30 to +85 °C)
  ±20 x $10^{-6}$ (-40 to +85 °C)
  ±25 x $10^{-6}$ (-40 to +105 °C)
- ESR: 60 Ω Max. (52 MHz, 59.97 MHz)



FA1008AN

(1.0 x 0.8 mm t = 0.3 mm Max.)

## Applications

- Wearables, Smart speakers, Digital health
- Smartphone, Tablets, PCs
- General Consumer Electronics/Appliances
- Industrial IoT, Meter, Light/Building monitoring
- Enables wireless communication:
  BLE, Wi-Fi, NB-IoT, etc.

## Description

FA1008AN is tiny size enabling designers to save board space without compromising performance.

The wide MHz frequency up to 100MHz and operating temperature up to 105 °C serve the popular wireless communication protocols for consumer and industrial IoT applications, making the FA1008AN ideal for devices and modules pushing the limit on features and size.

## Outline Drawing

Unit: mm

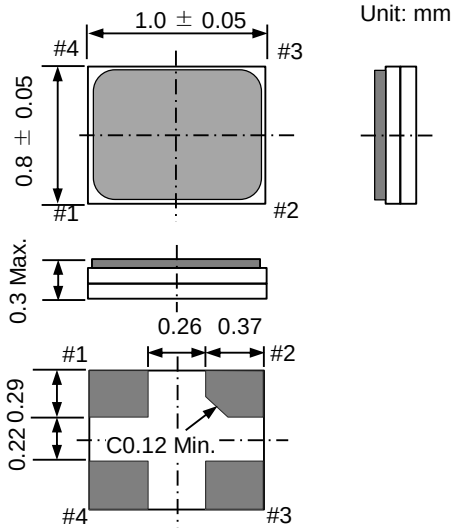


Internal connection
(TOP VIEW)

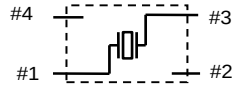


#2 and #4 are connected to the cover.
Please connect to ground

Terminal Assignment

| Pin | Connection |
|---|---|
| #1 | X'tal |
| #2 | GND |
| #3 | X'tal |
| #4 | GND |

## Typical Performance

Frequency vs. Temperature characteristics
(Frequency = 59.97MHz, n = 50)

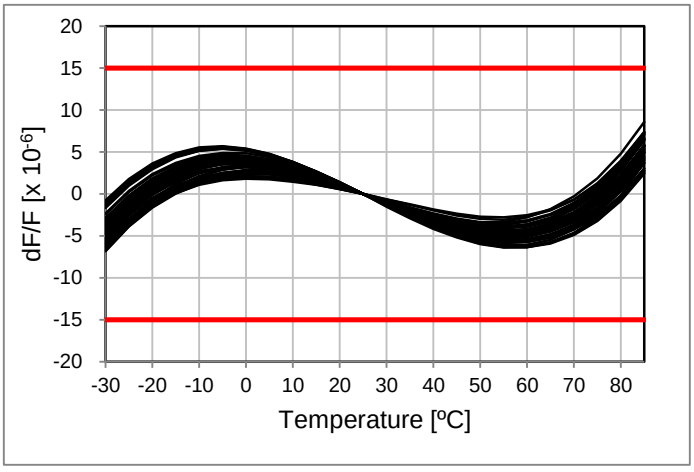

## [1]Product Number / Product Name

(1-1) Product Number

X1E000451xxxx26 (Please contact Epson for details)

(1-2) Product Name (Standard Form)

FA1008AN 59.970000MHz 12.0 +10.0-10.0

a b c d

a: Model b: Frequency c: Load capacitance (pF) d: Frequency tolerance ($x10^{-6}$, +25 °C)

In addition to the mentioned above specification items ("a" to "d"),
Please specify the frequency temperature characteristics from below Table1.

## [2] Absolute Maximum Ratings

| Item | Symbol | Rating value | | | Unit | Note |
|---|---|---|---|---|---|---|
| | | Min. | Typ. | Max. | | |
| Storage temperature range | T_stg | -40 | - | +125 | °C | Satisfy environmental characteristics specifications |

## [3] Operating Conditions

| Item | Symbol | Rating value | | | Unit | Note |
|---|---|---|---|---|---|---|
| | | Min. | Typ. | Max. | | |
| Operating temperature range | T_use | -40 | - | +105 | °C | |
| Level of drive | DL | 0.01 | 10 | 200 | µW | Recommended: 10 µW |

## [4] Static Characteristics

| Item | Symbol | Specifications | | | Unit | Conditions / Remarks |
|---|---|---|---|---|---|---|
| | | Min. | Typ. | Max. | | |
| Nominal frequency range | f_nom | 40.000 | - | 100.000 | MHz | Please contact Epson for frequencies other than those currently avail frequency |
| | | 52 / 59.97 | | | | Currently avail frequency |
| Frequency tolerance | f_tol | -10.0 | - | +10.0 | $x10^{-6}$ | +25 °C ± 3 °C<br>DL = 10 µW<br>Does not include frequency aging |
| Motional resistance (ESR) | R1 | - | - | 60 | Ω | Currently avail frequency<br>π circuit IEC 60444-2<br>T_use = -40 °C to +105 °C<br>DL = 10 µW |
| Shunt capacitance | C0 | - | - | 1.0 | pF | π circuit and Network Analyzer |
| Frequency vs. temperature characteristics | f_tem | Please specify from Table 1. | | | $x10^{-6}$ | Reference at +25 °C ± 3 °C |
| Load capacitance | CL | 6 | - | ∞ | pF | Please specify |
| Isolation resistance | IR | 500 | - | - | MΩ | |
| Frequency aging | f_age | -1.0 | - | +1.0 | $x10^{-6}$ | Currently avail frequency<br>+25°C , First year |

Table 1. Frequency vs. temperature characteristics

| Operating temperature range | Frequency temperature characteristics |
|---|---|
| -20 °C to +75 °C | ±10 x $10^{-6}$ |
| -30 °C to +85 °C | ±15 x $10^{-6}$ |
| -40 °C to +85 °C | ±20 x $10^{-6}$ |
| -40 °C to +105 °C | ±25 x $10^{-6}$ |

*Please contact Epson for other than the above

[5] Example of frequency vs. temperature characteristics

(5-1) 52 MHz: ±20 x $10^{-6}$ / -40°C to 85°C

n = 50

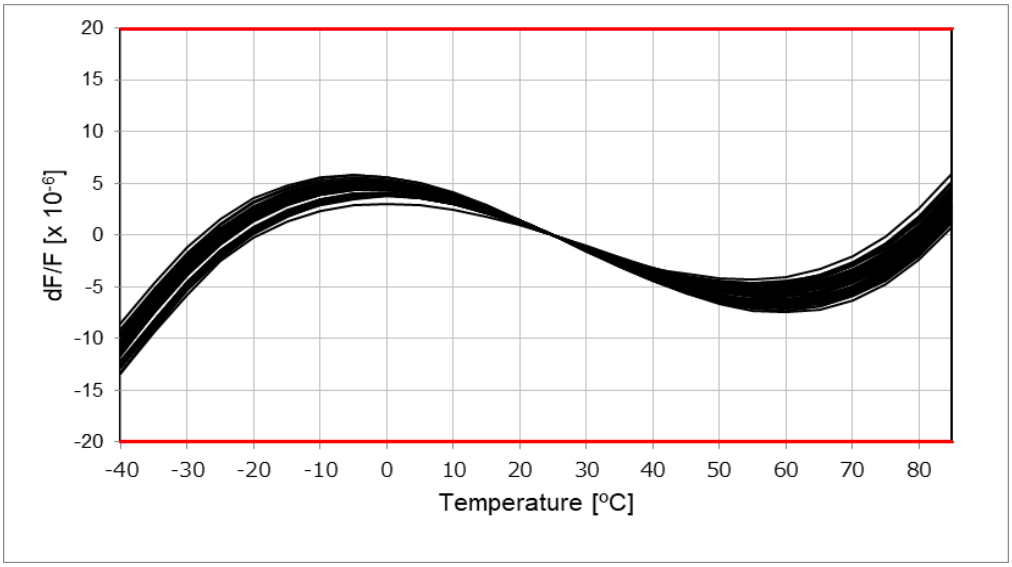


(5-2) 59.97 MHz: ±15 x $10^{-6}$ / -30°C to 85°C

n = 50

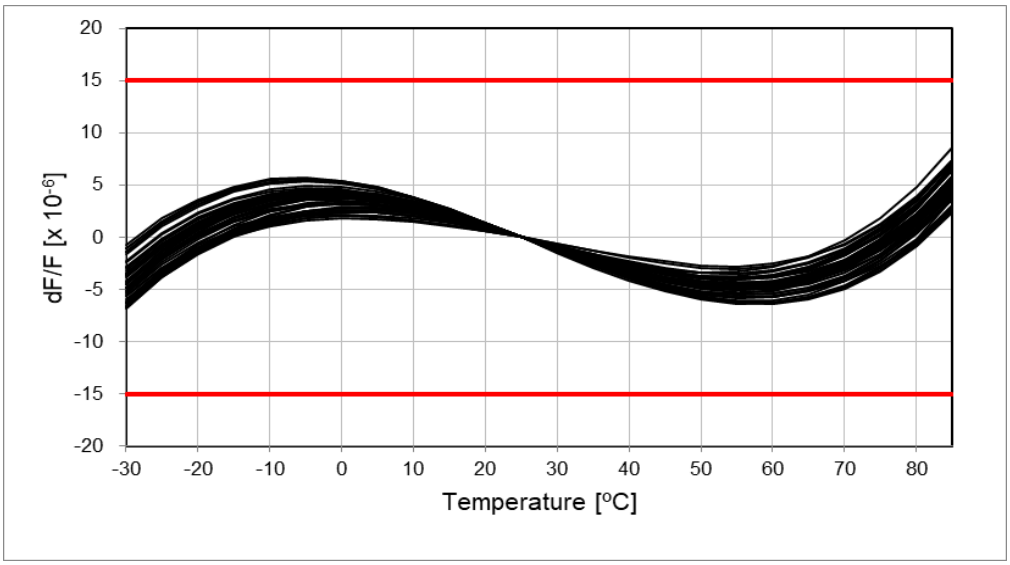

## [ 6 ] Marking Description

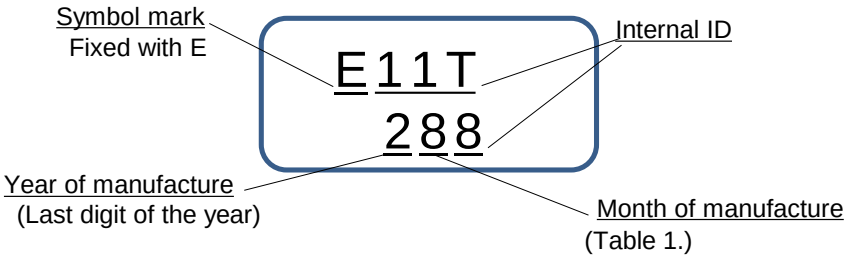


Table 1. Month of manufacture

| Month | Jan | Feb | Mar | Apr | May | Jun | Jul | Aug | Sep | Oct | Nov | Dec |
|---|---|---|---|---|---|---|---|---|---|---|---|---|
| Code | 1 | 2 | 3 | 4 | 5 | 6 | 7 | 8 | 9 | X | Y | Z |

## [7] Outline Drawing and Recommended Footprint

Unit: mm

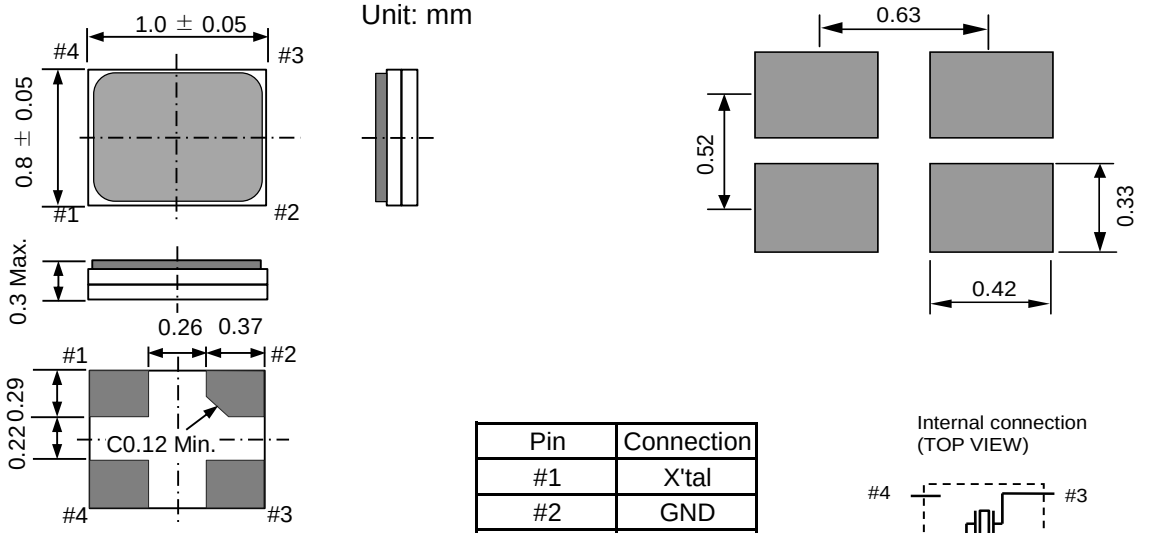


| Pin | Connection |
|---|---|
| #1 | X'tal |
| #2 | GND |
| #3 | X'tal |
| #4 | GND |

Internal connection
(TOP VIEW)




#2 and #4 are connected to the cover.
Please connect to ground

Reference weight Typ.: 0.776 mg
Terminal coating: Au plating

## [8] Moisture Sensitivity Level

### (8-1) Moisture Sensitivity Level (MSL)

| Parameter | Specification | Conditions |
|---|---|---|
| MSL | LEVEL1 | IPC/JEDEC J-STD-020E |

## [9] Reflow Profile

IPC/JEDEC J-STD-020E

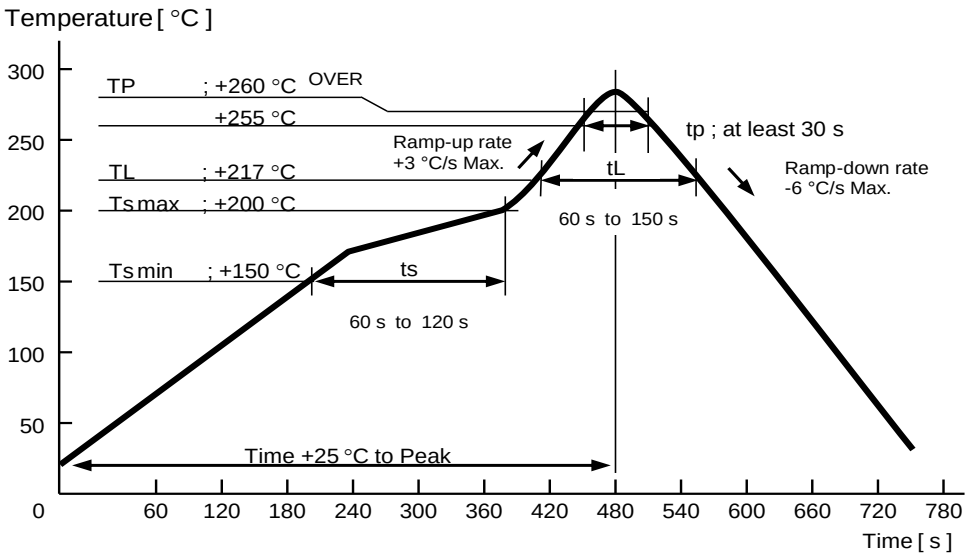

## [10] Packing Information

### (10-1) Packing Quantity

The last two digits of the Product Number (X1E000451xxxx26) defines the packing quantity.
The standard is "26" for a 6 000 pcs/Reel.

### (10-2) Taping Specification

Subject to EIA-481, IEC 60286, JIS C0806

#### (1) Tape Dimensions

Carrier Tape Material: PS (Polystyrene)
Top Tape Material: PET (Polyethylene Terephthalate) + PE (Polyethylene)

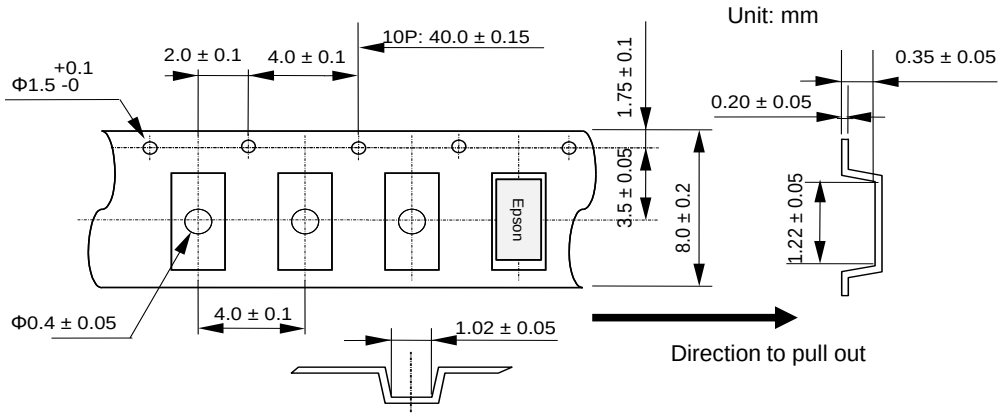


#### (2) Reel Dimensions

Center Material: PS (Polystyrene)
Reel Material: PS (Polystyrene)

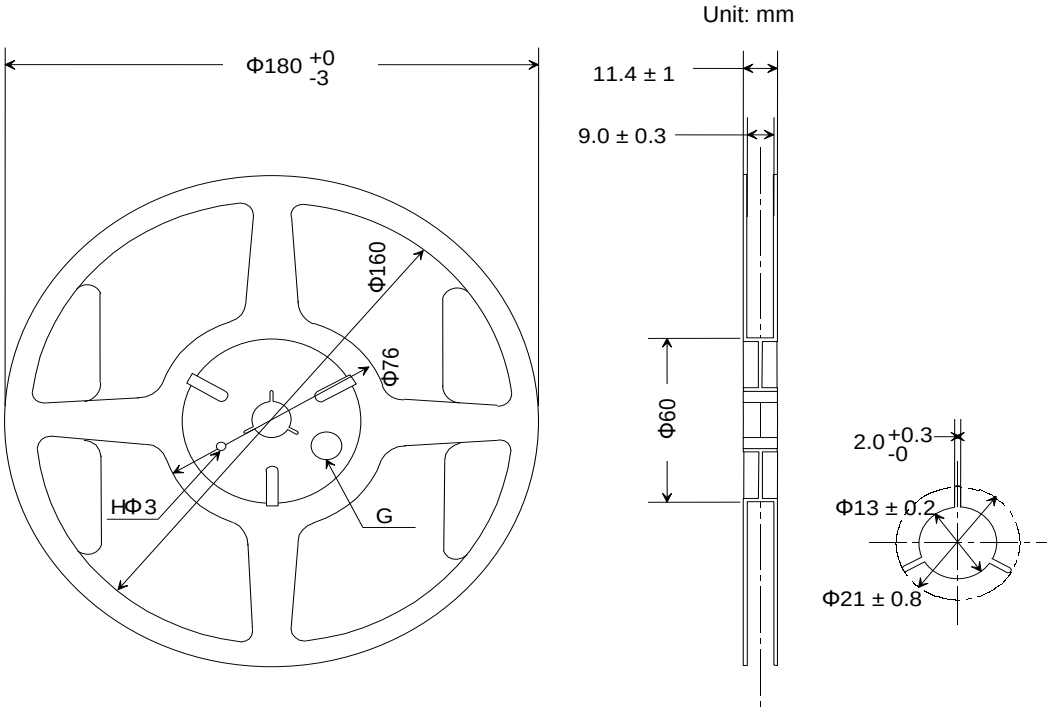

## [11] Handling Precautions

Prior to using this product, please carefully read the section entitled “Precautions” on our Web site (https://www5.epsondevice.com/en/information/#precaution) for instructions on how to handle and use the product properly to ensure optimal performance of the product in your equipment.
Before using the product under any conditions other than those specified therein, please consult with Epson to verify and confirm that the performance of the product will not be negatively affected by use under such conditions.
In addition to the foregoing precautions, in order to avoid degrading the performance of the product, we strongly advise that you adhere to the below recommendations:

1. Limit reflow to 3 times.
   This product has gone through AuSn melt sealing.
   Reflow mounting is recommended instead of using a soldering iron or air heater.
   When the product is removed from a PCB board or module with a soldering iron, please do so carefully as excess heat to the AuSn sealing material (melt point +278 ºC) may deteriorate the seal and hermeticity.
2. Avoid using the products if it received any excessive shocks and vibrations.
   Crystal products may be damaged under some conditions during mounting if exposed to excess shock.
   Please set the mounting conditions to a slow mounting speed on the PCB to minimize shock as much as possible.
   Please review the conditions after the changed are made.
3. Keep the electrode wiring as short as possible to ensure normal oscillation.
4. Store the crystal products at normal temperature (+15 ºC to +35 ºC) and humidity (25 %RH to 85 %RH）
   Storing the crystal products under higher temperature or high humidity over one year may affect frequency stability or solderability.
   Contact Epson before use if the product has been stored outside the conditions mentioned above.
5. Ultrasonic equipment used for cleaning or bonding may deteriorate the characteristics of the product.
   Be sure to check in advance.
6. In high humidity environment, dew condensation on the PCB board may cause malfunction such frequency shift or no oscillation.
7. Applying excessive drive level to the crystal units may cause deterioration of characteristics or damage.
   Design and test the circuit so that the proper drive level is maintained.
8. The characteristic such as frequency, etc. may differ from your measurement depending on the measurement method or conditions.
   Contact Epson for any questions.
9. Do not route any signal lines, supply voltage lines, or GND lines underneath the area where the oscillators are mounted.
   If shielding with GND is required, shield the side furthest from the oscillator circuit.
   any internal layers and on the opposite side of the PCB. care not to place signal lines near the product as this may have an adverse affect on the performance of the product.
10. Use soldering paste <80 µm Max, the products are low profile specification.
11. Ensure adequate negative resistance is allocated in the oscillation circuit,
    otherwise oscillation startup time may increase or no oscillation may occur.
    In order to avoid this, provide enough negative resistance that is 5 time the motional resistance(R1)
12. Aging specifications are estimated from environmental reliability tests and expected frequency variation over time.
    They do not provide a guarantee of aging over the product lifecycle.
13. Should any customer use the product in any manner contrary to the precautions and/or advice herein,
    such use shall be done at the customer’s own risk.

< Check of Negative resistance >

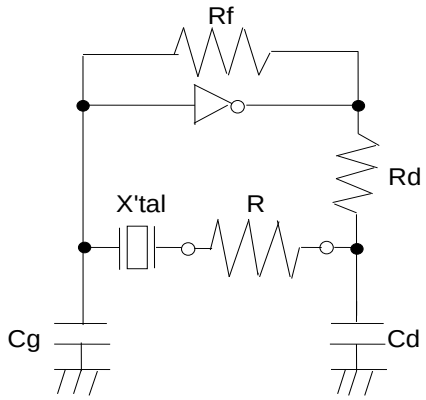


1. Connect the resistance (R) to the circuit in series with the crystal unit.
2. Adjust (R) so that oscillation can start (or stop).
3. Measure (R) when oscillation just starts (or stops) in (2) above.
4. Recommended(R)
   R > R1 x 5

## PROMOTION OF ENVIRONMENTAL MANAGEMENT SYSTEM CONFORMING TO INTERNATIONAL STANDARDS

At Seiko Epson, all environmental initiatives operate under the Plan-Do-Check-Action (PDCA) cycle designed to achieve continuous improvements. The environmental management system (EMS) operates under the ISO 14001 environmental management standard.

All of our major manufacturing and non-manufacturing sites, in Japan and overseas, completed the acquisition of ISO 14001 certification.

ISO 14000 is an international standard for environmental management that was established by the International Standards Organization in 1996 against the background of growing concern regarding global warming, destruction of the ozone layer, and global deforestation.

## WORKING FOR HIGH QUALITY

In order provide high quality and reliable products and services than meet customer needs, Seiko Epson made early efforts towards obtaining ISO9000 series certification and has acquired ISO9001 for all business establishments in Japan and abroad. We have also acquired IATF 16949 certification that is requested strongly by major manufacturers as standard.

IATF 16949 is the international standard that added the sector-specific supplemental requirements for automotive industry based on ISO9001.

■ Explanation of marks used in this datasheet

| | |
|---|---|
| Pb Free | **●Pb free.** |
| RoHS Compliant | **●Complies with EU RoHS directive.**<br>*About the products without the Pb-free mark.<br>Contains Pb in products exempted by EU RoHS directive<br>(Contains Pb in sealing glass, high melting temperature type solder or other) |

**NOTICE：PLEASE READ CAREFULLY BELOW BEFORE THE USE OF THIS DOCUMENT**

1. The content of this document is subject to change without notice. Before purchasing or using Epson products, please contac t with sales representative of Seiko Epson Corporation (“Epson”) for the latest information and be always sure to check the latest information published on Epson’s official web sites and resources.
2. This document may not be copied, reproduced, or used for any other purposes, in whole or in part, without Epson’s prior co nsent.
3. Information provided in this document including, but not limited to application circuits, programs and usage, is for refer ence purpose only. Epson makes no guarantees against any infringements or damages to any third parties’ intellectual property rights or any other rights resulting from the information. This document does not grant you any licenses, any intellectual property rights or any other rights with respect to Epson products owned by Epson or any third parties.
4. Epson has prepared this document carefully to be accurate and dependable, but Epson does not guarantee that the informatio n is always accurate and complete. Epson assumes no responsibility for any damages you incurred due to any misinformation in this document.
5. Epson products listed in this document and our associated technologies shall not be used in any equipment or systems that laws and regulations in Japan or any other countries prohibit to manufacture, use or sell. Furthermore, Epson products and our associated technologies shall not be used for the purposes of military weapons development (e.g. mass destruction weapons), military use, or any other military applications. If exporting Epson products or our associated technologies, please be sure to comply with the Foreign Exchange and Foreign Trade Control Act in Japan, Export Administration Regulations in the U.S.A (EAR) and other export-related laws and regulations in Japan and any other countries and to follow their required procedures.
6. Epson assumes no responsibility for any damages (whether direct or indirect) caused by or in relation with your non -compliance with the terms and conditions in this document or for any damages (whether direct or indirect) incurred by any third party that you give, transfer or assign Epson products.
7. For more details or other concerns about this document, please contact our sales representative.
8. Company names and product names listed in this document are trademarks or registered trademarks of their respective compan ies.

●Disclaimer

1. Epson products are designed for use in general electronic equipment applications that do not require extremely high reliab ility or safety.

2. Epson does not represent or warrant that its products will not cause a failure for any particular application, except for cases where the failure is a direct result caused by defects in materials and workmanship of this product.
   If a product fails due to defects in materials and workmanship, to the maximum extent permitted by law, we will, at our sole discretion, refund or replace the affected product.

3. When products for used directly or indirectly in certain devices or applications (ex. Nuclear power, aerospace, infrastruc ture facilities, medical equipment, etc.) which are connected to or affect safety of human life or property, Customer is solely responsible for determining if the products and respective specifications are suitable for the intended use in particular customer applications.
   Customer shall implement necessary and proper safety design and measures (including redundant design, malfunction prevention design, etc.) to ensure reliability and safety before using the products in/with customer’s Equipment.

4. No dismantling, analysis, reverse engineering, modification, alteration, adaptation, reproduction, etc., of Epson products is allowed. Furthermore, any defects caused by this are not covered by the warranty.

©Seiko Epson Corporation 2025