AEC-Q200 compliant small and high frequency MHz crystal unit: Product Name: FA1612AA

Features

- AEC-Q200 Compliant
- Package size: 1.6 x 1.2 mm, t = 0.35 mm Max.
- Frequency range: 24 MHz to 80 MHz
- Frequency tolerance: ±10 x 10^{-6} (@+25 °C)
- Frequency vs. temperature characteristics:
  ±20 x 10^{-6} (-40 °C to +85 °C)
  ±25 x 10^{-6} (-40 °C to +105 °C)
  ±50 x 10^{-6} (-40 °C to +125 °C)

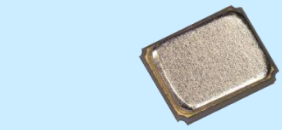

FA1612AA
(1.6 x 1.2 mm, t = 0.35 mm Max.)

Description

With the evolution of in-vehicle devices such as electronic keys (key fobs), cameras, and TCUs (Telematics Control Units), there is a growing market need for miniaturization and modularization. In conjunction with this, customers are demanding small, thin, high-frequency crystal units. We have commercialized the FA1612AA to accommodate evolving wireless communication, AD (Autonomous Driving) and ADAS (Advanced Driver-Assistance Systems) technologies.

External Dimensions

Unit : mm

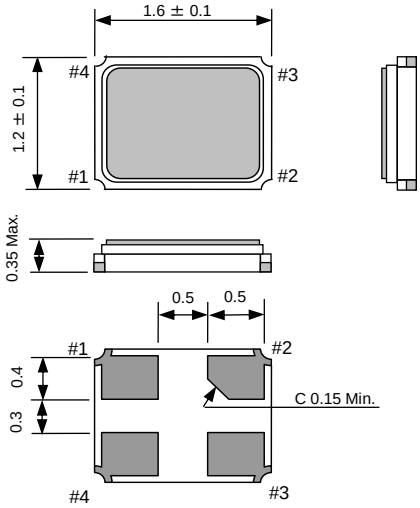

Pin	Connection
#1	X'tal
#2	GND
#3	X'tal
#4	GND

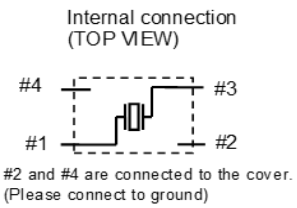

[1]Product Number / Product Name

(1-1) Product Number

X1E000461xxxx26 (Please contact Epson for details)

(1-2)Product Name (Standard Form)

FA1612AA 55.200000MHz 12.0 +10.0-10.0

a b c d

a: Model b: Frequency c: Load capacitance(pF) d: Frequency tolerance(x10^{-6}, +25 °C)

In addition to the mentioned above specification items("a" to "d"),
and pleases specify the frequency vs. temperature characteristics (one of "e" to "g" specification below).

e: ±20 x 10^{-6} / -40 °C to +85 °C, f: ±25 x 10^{-6} / -40 °C to +105 °C, g: ±50 x 10^{-6} / -40 °C to +125 °C

[2] Absolute Maximum Ratings

Item	Symbol	Rating value			Unit	Note
		Min.	Typ.	Max.		
Storage temperature range	T_stg	-55	-	+125	°C	Satisfy environmental characteristics specifications
Level of drive	DL	-	-	500	µW	No damage

[3] Operating Conditions

Item	Symbol	Rating value			Unit	Note
		Min.	Typ.	Max.		
Operating temperature range	T_use	-40	-	+125	°C	
Level of drive	DL	0.01	10	200	µW	Recommended:10 µW

[4] Static Characteristics

Item	Symbol	Specifications			Unit	Conditions / Remarks
		Min.	Typ.	Max.		
Nominal frequency range	f_nom	24	-	80	MHz	Please contact Epson about available frequncies
		24, 25, 26, 27, 32, 37.4, 38.4, 40, 50, 52, 55.2, 59.97, 76.8, 80				Standard frequency
Frequency tolerance	f_tol	-10	-	+10	x 10^{-6}	+25 °C ± 3 °C DL = 10 µW Does not include frequency aging
Frequency vs. temperature characteristics	f_tem	±20 x 10^{-6} / -40 °C to +85 °C			-	Reference at +25 °C ± 3 °C Specify from the list on the left. Please contact us for anything other than those listed on the left.
		±25 x 10^{-6} / -40 °C to +105 °C				
		±50 x 10^{-6} / -40 °C to +125 °C				
Motional resistance (ESR)	R1	Table 1.			-	π circuit IEC 60444-2 T_use = Operating temperature range DL = 10 µW
Shunt capacitance	C0	-	-	1.0	pF	π circuit and Network Analyzer
Load capacitance	CL	6	-	∞	pF	Please specify
Isolation resistance	IR	500	-	-	MΩ	
Frequency aging	f_age	±3			x 10^{-6}	+25°C, First year *1

*1 The frequency aging shift is an estimate value from reliability test results and is not a guarantee value.

Table 1. Motional resistance (ESR)

Frequency range	Motional resistance
24 MHz ≤ f_nom < 32 MHz	200 Ω Max.
32 MHz ≤ f_nom < 52 MHz	80 Ω Max.
52 MHz ≤ f_nom ≤ 80 MHz	60 Ω Max.

Please contact us for anything other than the above.

[5] Example of Frequency vs. Temperature Characteristics

(5-1) 24.000 MHz n = 20

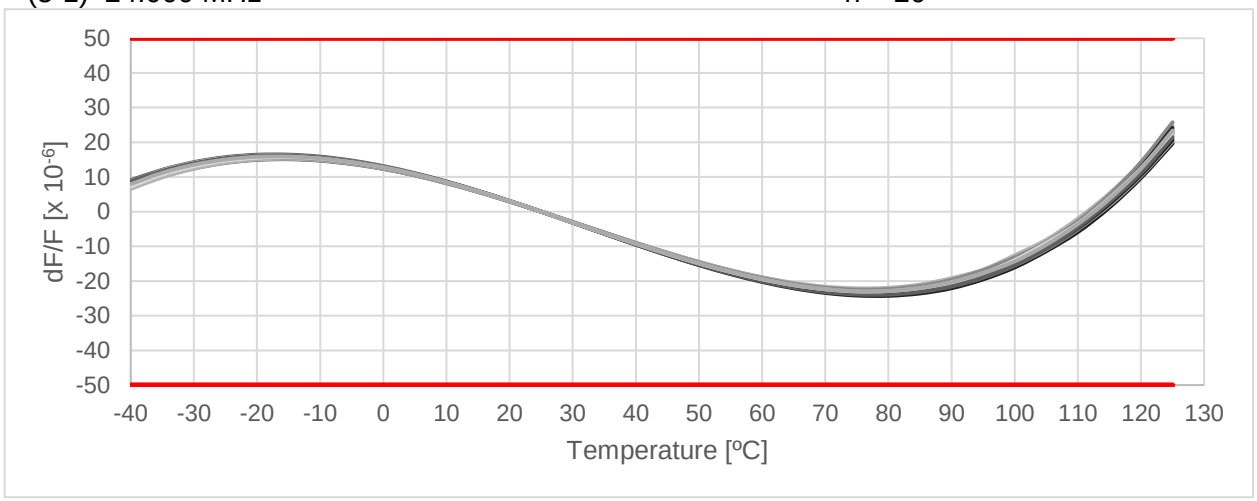

(5-2) 55.200 MHz n = 20

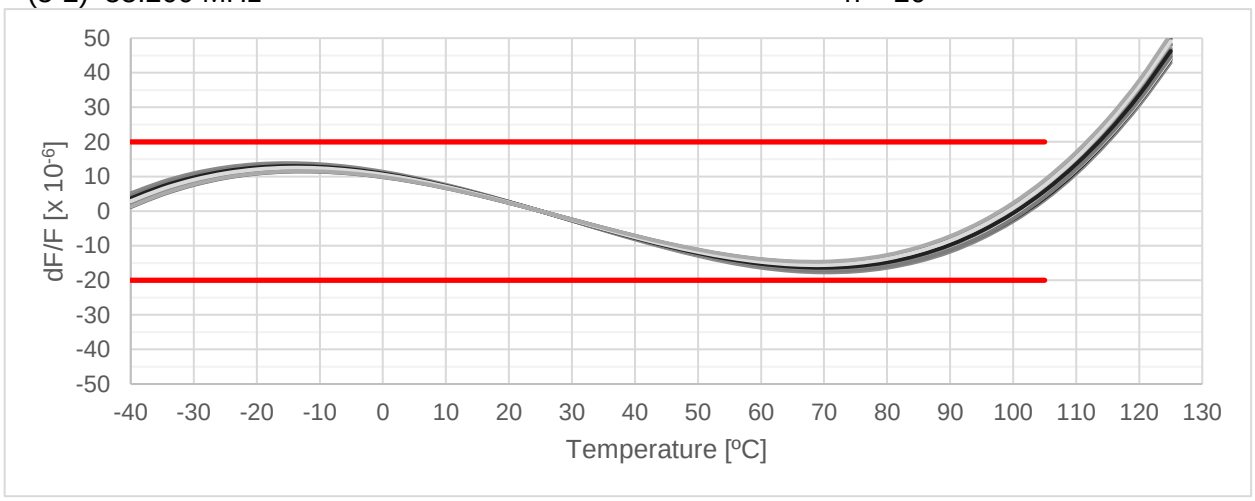

(5-3) 80.000 MHz n = 20

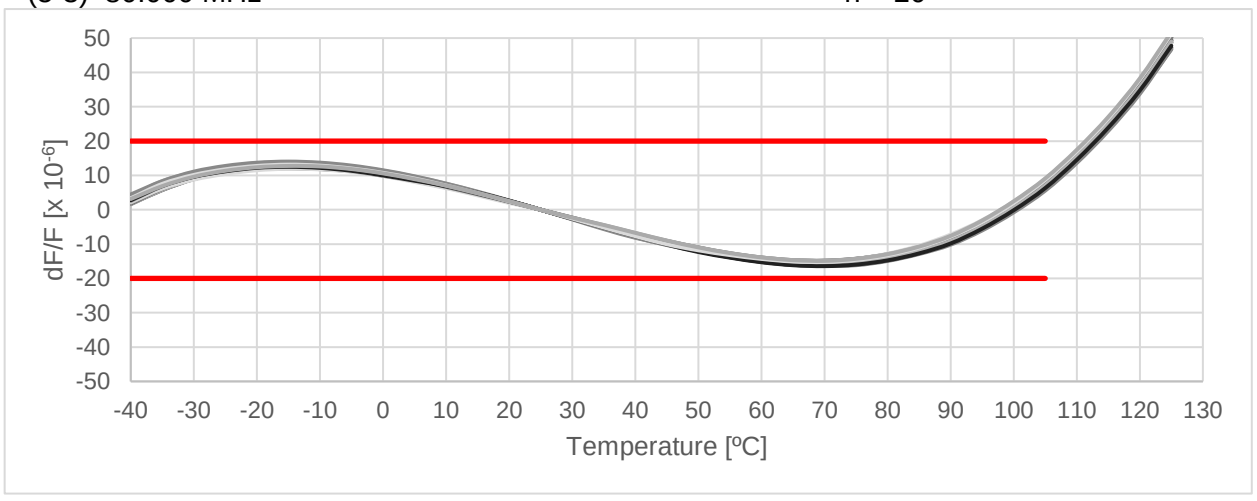

[6] Marking Description

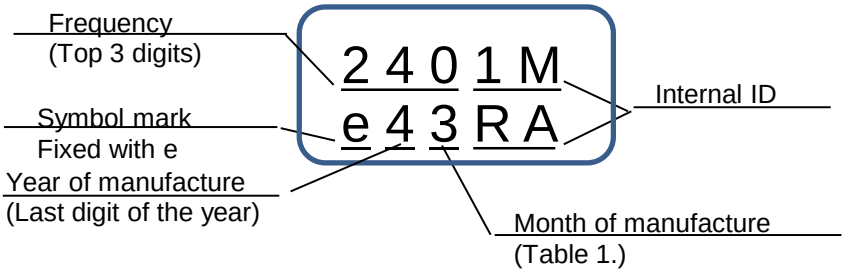

Table 1. Month of manufacture

Month	Jan	Feb	Mar	Apr	May	Jun	Jul	Aug	Sep	Oct	Nov	Dec
Code	1	2	3	4	5	6	7	8	9	X	Y	Z

[7] Outline Drawing and Recommended Footprint

Unit: mm

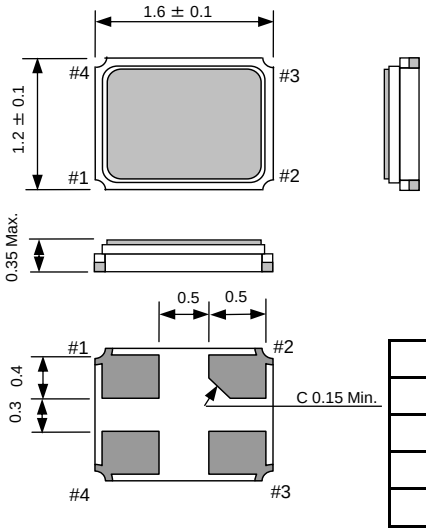

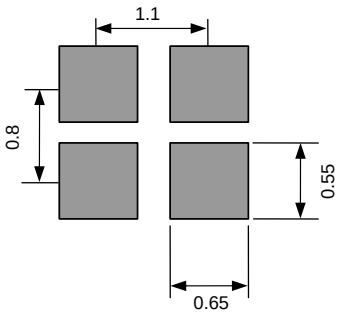

Pin	Connection
#1	X'tal
#2	GND
#3	X'tal
#4	GND

Internal connection
(TOP VIEW)

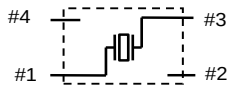

#2 and #4 are connected to the cover.
(Please connect to ground)

Reference weight Typ.: 3.0 mg

Terminal coating: Au plating

[8] Moisture Sensitivity Level

(8-1)Moisture Sensitivity Level (MSL)

Parameter	Specification	Conditions
MSL	LEVEL 1	JEDEC J-STD-020E

[9] Reflow Profile

JEDEC J-STD-020E

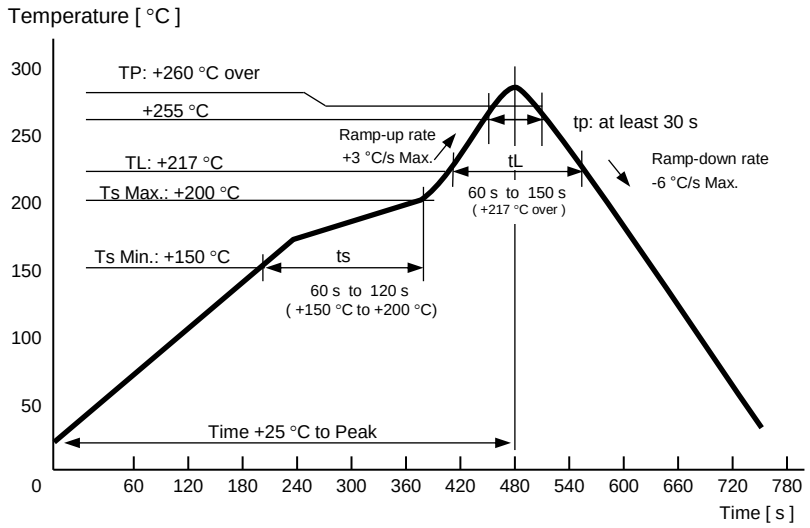

[10] Packing Information

(10-1) Packing Quantity

The last two digits of the Product Number (X1E000461xxxx26) defines the packing quantity.
The standard is "26" for a 6 000 pcs/Reel.

(10-2) Taping Specification

Subject to EIA-481, IEC-60286 and JIS C0806

(1) Tape Dimensions

Carrier Tape Material : PS (Polystyrene)
Top Tape Material : PET (Polyethylene Terephthalate) +PE (Polyethylene)

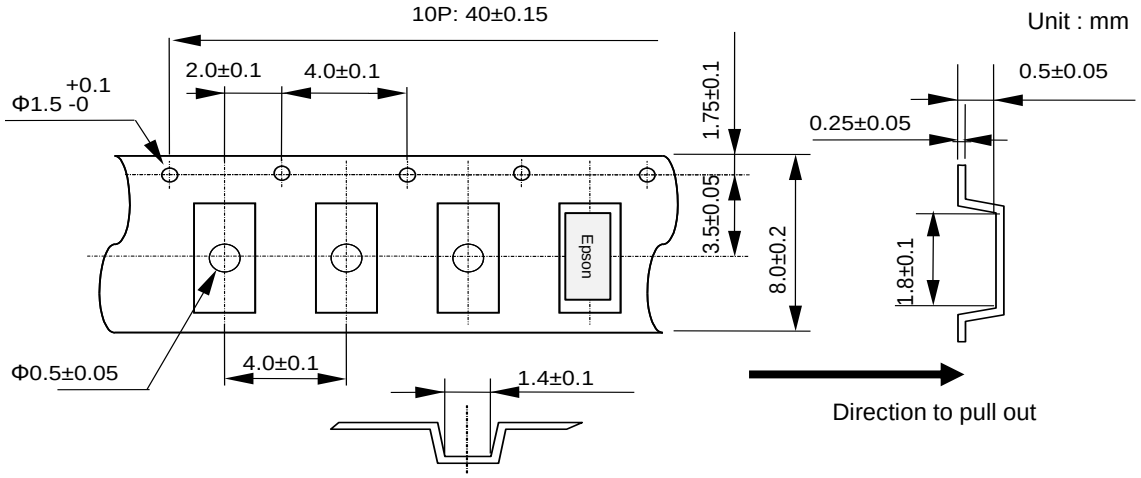

(2) Reel Dimensions

Center Material : PS (Polystyrene)
Reel Material : PS (Polystyrene)

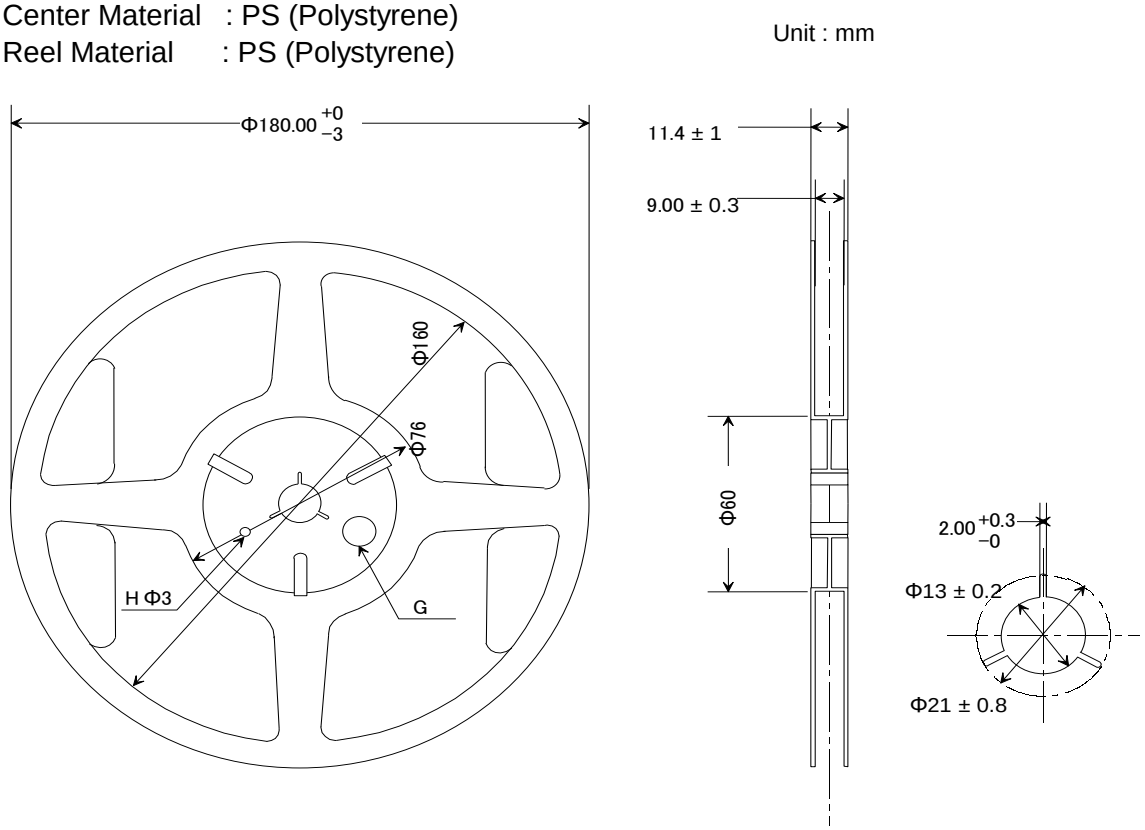

[11] Handling Precautions

Prior to using this product, please carefully read the section entitled “Precautions” on our Web site (https://www.epsondevice.com/crystal/en/support/precaution/) for instructions on how to handle and use the product properly to ensure optimal performance of the product in your equipment.
In addition to the foregoing precautions, in order to avoid degrading the performance of the product, we strongly advise that you adhere to the below recommendations:

1. Max 5 times re-flow is allowed. Its recommended to manually solder when not enough/no solder detected.(Using soldering iron at +350 °C × within 5 seconds)
2. Do not expose this product to excessive mechanical shock or vibration. This product can be damaged by mechanical shock during the soldering process depending on the equipment used, process conditions, and any impact forces experienced. Always follow appropriate procedures, particularly when changing the assembly process in any way and be sure to follow applicable process qualification standards before starting production.
3. Keep PCB routing from the terminal(s) to the load as short as possible for best performance.
4. Product failures during the warranty period only apply when the product is used according to the recommended operating conditions described in the specifications. Products that have been opened for analysis or damaged will not be covered. It is recommended to store and use in normal temperature and humidity environments described in the specifications to ensure frequency accuracy and prevent moisture condensation. If the product is stored for more than one year, please confirm the pin solderability prior to use.
5. This product may be affected to ultrasonic cleaning. It is depends on the cleaning conditions (Cleaning machine type / power/time / content/position etc.). The warranty will not cover any damage due to this type of usage. Check conditions prior to use.
6. If the oscillation circuit is exposed to condensation, the frequency may change or oscillation may stop. Do not use in any conditions where condensation occurs.
7. If an excessive excitation is applied to the crystal unit, the characteristics may be degraded or destruction may occur. Design the oscillation circuit so that the excitation level is appropriate.
8. Depending on the method and conditions used to measure characteristic values such as frequency, deviation from our measured values may occur. Please check and verify the characteristics before use.
9. Do not route any signal lines, supply voltage lines, or GND lines underneath the area where the oscillators are mounted including any internal layers and on the opposite side of the PCB. To avoid any issues due to interference of other signal lines, please take care not to place signal lines near the product as this may have an adverse affect on the performance of the product.
10. Since this product is thin, please check the thickness and amount of solder paste in advance to ensure that short circuits do not occur.
11. If sufficient negative resistance is not provided by the oscillation circuit, the Xtal may not oscillate or take a long time to start. Please design the circuit as follows. If there are any recommended conditions from the IC manufacturer, please follow them.
12. Aging specifications are estimated from environmental reliability tests and expected frequency variation over time. They do not provide a guarantee of aging over the product lifecycle.
13. Should any customer use the product in any manner contrary to the precautions and/or advice herein, such use shall be done at the customer’s own risk.

< Check of Negative resistance >

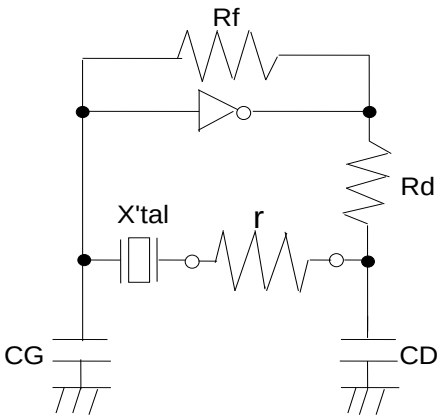

1) Insert a pure resistance r in series with the X'tal.

2) Adjust r and find the maximum r value that starts oscillation.

3) Check the value of r in the oscillation state of 2).
Negative resistance of the circuit |-R| =
r + Series resistance value R1 of the X'tal

4) Negative resistance |-R| guideline:
|-R| > R1 Max. x 5

PROMOTION OF ENVIRONMENTAL MANAGEMENT SYSTEM CONFORMING TO INTERNATIONAL STANDARDS

At Seiko Epson, all environmental initiatives operate under the Plan-Do-Check-Action (PDCA) cycle designed to achieve continuous improvements. The environmental management system (EMS) operates under the ISO 14001 environmental management standard.

All of our major manufacturing and non-manufacturing sites, in Japan and overseas, completed the acquisition of ISO 14001 certification.

ISO 14000 is an international standard for environmental management that was established by the International Standards Organization in 1996 against the background of growing concern regarding global warming, destruction of the ozone layer, and global deforestation.

WORKING FOR HIGH QUALITY

In order provide high quality and reliable products and services than meet customer needs, Seiko Epson made early efforts towards obtaining ISO9000 series certification and has acquired ISO9001 for all business establishments in Japan and abroad. We have also acquired IATF 16949 certification that is requested strongly by major manufacturers as standard.

IATF 16949 is the international standard that added the sector-specific supplemental requirements for automotive industry based on ISO9001.

■ Explanation of marks used in this datasheet

Pb Free	**•Pb free.**
RoHS Compliant	**•Complies with EU RoHS directive.** *About the products without the Pb-free mark. Contains Pb in products exempted by EU RoHS directive (Contains Pb in sealing glass, high melting temperature type solder or other)
For Automotive	**•Designed for automotive applications such as Car Multimedia, Body Electronics, Remote Keyless Entry etc.**

NOTICE: PLEASE READ CAREFULLY BELOW BEFORE THE USE OF THIS DOCUMENT

1. The content of this document is subject to change without notice. Before purchasing or using Epson products, please contact with sales representative of Seiko Epson Corporation ("Epson") for the latest information and be always sure to check the latest information published on Epson's official web sites and resources.
2. This document may not be copied, reproduced, or used for any other purposes, in whole or in part, without Epson's prior consent.
3. Information provided in this document including, but not limited to application circuits, programs and usage, is for reference purpose only. Epson makes no guarantees against any infringements or damages to any third parties' intellectual property rights or any other rights resulting from the information. This document does not grant you any licenses, any intellectual property rights or any other rights with respect to Epson products owned by Epson or any third parties.
4. Epson has prepared this document carefully to be accurate and dependable, but Epson does not guarantee that the information is always accurate and complete. Epson assumes no responsibility for any damages you incurred due to any misinformation in this document.
5. Epson products listed in this document and our associated technologies shall not be used in any equipment or systems that laws and regulations in Japan or any other countries prohibit to manufacture, use or sell. Furthermore, Epson products and our associated technologies shall not be used for the purposes of military weapons development (e.g. mass destruction weapons), military use, or any other military applications. If exporting Epson products or our associated technologies, please be sure to comply with the Foreign Exchange and Foreign Trade Control Act in Japan, Export Administration Regulations in the U.S.A (EAR) and other export-related laws and regulations in Japan and any other countries and to follow their required procedures.
6. Epson assumes no responsibility for any damages (whether direct or indirect) caused by or in relation with your non-compliance with the terms and conditions in this document or for any damages (whether direct or indirect) incurred by any third party that you give, transfer or assign Epson products.
7. For more details or other concerns about this document, please contact our sales representative.
8. Company names and product names listed in this document are trademarks or registered trademarks of their respective companies.

●Disclaimer

1. Epson products are designed for use in general electronic equipment applications that do not require extremely high reliability or safety.

2. Epson does not represent or warrant that its products will not cause a failure for any particular application, except for cases where the failure is a direct result caused by defects in materials and workmanship of this product.
If a product fails due to defects in materials and workmanship, to the maximum extent permitted by law, we will, at our sole discretion, refund or replace the affected product.

3. When products for used directly or indirectly in certain devices or applications (ex. Nuclear power, aerospace, infrastructure facilities, medical equipment, etc.) which are connected to or affect safety of human life or property, Customer is solely responsible for determining if the products and respective specifications are suitable for the intended use in particular customer applications.
Customer shall implement necessary and proper safety design and measures (including redundant design, malfunction prevention design, etc.) to ensure reliability and safety before using the products in/with customer's Equipment.

4. For the products designed for automotive applications, the products comply with AEC-Q100 or AEC-Q200.
Products do not comply with ISO 26262 (Products are not categorized to ASIL A, B, C and D).

5. No dismantling, analysis, reverse engineering, modification, alteration, adaptation, reproduction, etc., of Epson products is allowed.
Furthermore, any defects caused by this are not covered by the warranty.

©Seiko Epson Corporation 2025