Temperature Compensated Crystal Oscillator (TCXO)

· Package size (2.0 mm × 1.6 mm × 0.61 mm)
· High stability TCXO-Standby
· Output waveform : Clipped sine wave
· Reference weight Typ. 8.1 mg

[1] Product Number / Product Name

(1-1) Product Number / Ordering Code

X1G0057310602xx

last 2 digits code(xx) define Quantity.
The standard is "16", 3 000 pcs/Reel.

(1-2) Product Name / Model Name

TG2016SLN 38.400000 MHz CCGSNM

[2] Operating Conditions

Parameter	Symbol	Specifications			Unit	Conditions
		Min.	Typ.	Max.		
Supply voltage	Vcc	3.135	3.3	3.465	V	-
	GND	0	-	0	V	-
Operating temperature range	T_use	-40	-	+85	°C	-
Output load	Load_R	9	10	11	kΩ	-
	Load_C	9	10	11	pF	-
	Cc	0.01	-	-	µF	DC-cut capacitor *

* DC-cut capacitor is not included in this TCXO. Please attach an external DC-cut capacitor to the out pin.

[3] Frequency Characteristics

(Vcc = 3.3 V, GND = 0.0 V, $\overline{ST}$ = Vcc, Load = 10 kΩ // 10 pF, T_use = +25 °C)

Parameter	Symbol	Specifications			Unit	Conditions
		Min.	Typ.	Max.		
Output Frequency	fo	-	38.400000	-	MHz	
Frequency tolerance *1	f_tol	-2.0	-	+2.0	x10⁻⁶	T_use = +25 °C After 2 reflows *2
Frequency / temperature characteristics	fo-Tc	-0.5	-	+0.5	x10⁻⁶	T_use = -40 °C to +85 °C (Reference to +25 °C)
Frequency / load coefficient	fo-Load	-0.2	-	+0.2	x10⁻⁶	Load_R // Load_C ± 10 %
Frequency / voltage coefficient	fo-Vcc	-0.2	-	+0.2	x10⁻⁶	Vcc ± 5 % *3
Frequency aging *4	f_age	-1.0	-	+1.0	x10⁻⁶	T_use = +25 °C first year
		-5.0	-	+5.0	x10⁻⁶	T_use = +25 °C 10 years

*1 Include initial frequency tolerance and frequency deviation after reflow cycles.
*2 Measured in the elapse of 24 hours after reflow soldering.
*3 Vcc ± 5 % must be in operating supply voltage range (3.135 V to 3.465 V)
*4 Aging stability is estimated from environmental reliability tests; expected amount of the frequency variation.

[4] Electrical Characteristics

(Vcc = 3.3 V, GND = 0.0 V, $\overline{ST}$ = Vcc, Load = 10 kΩ // 10 pF)

Parameter	Symbol	Specifications			Unit	Conditions
		Min.	Typ.	Max.		
Current consumption	Icc	-	-	2.0	mA	-
Output level	Vpp	0.8	-	1.5	V	Peak to peak voltage
Symmetry	SYM	45	50	55	%	GND level (DC-cut)
Start up time	t_str	-	-	2.0	ms	Until frequency has been reached within ±1.0 x 10⁻⁶ of final freq.
		-	-	2.0	ms	Until output signal has been reached min 90 % of final amp.
Harmonics	-	-	-	-5.0	dBc	3rd harmonics
Standby current	I_std	-	-	3	µA	$\overline{ST}$ =GND
Input voltage	V_{IH}	80 % Vcc	-	-	V	$\overline{ST}$ terminal (Enable voltage)
Input voltage	V_{IL}	-	-	20 % Vcc	V	$\overline{ST}$ terminal (Disable voltage)
Output disable time	t_stp	-	-	150	ns	$\overline{ST}$ terminal: High to Low
Output enable time	t_sta	-	-	2	ms	$\overline{ST}$ terminal: Low to High Until frequency has been reached within ±1.0 x 10⁻⁶ of final freq. Until output signal has been reached min 90 % of final amp.

[For other general specifications, please refer to the attached Full Data Sheet below]

+105 °C & Standby compatible temperature compensated crystal oscillator (TCXO)

Product name : TG2016SLN

Features

- Frequency range: 10 MHz to 55.2 MHz
- Output: Clipped Sine Wave
- Supply voltage: 1.7 V to 3.63 V
- Operating temperature: -40 °C to +105 °C
- Frequency / temperature characteristic
  : ±0.5 x 10^{-6} Max. (-40 °C to +85 °C)
  : ±5.0 x 10^{-6} Max. (+85 °C to +105 °C)
- Function: TCXO-Standby, VC-TCXO, TCXO

Applications

- GNSS
- Wireless communication devise
- LPWA, LTE, WiMAX, Wi-Fi, W-LAN
- IoT etc..

Description

TG2016SLN support 105 °C and standby function using an Epson-developed and fabricated IC and MHz fundamental crystal .

Combined with the single seal structural advantage of tiny size, low height and pressure & molding sealing resistance, the SLN series is ideal for IoT and industrial applications.

Outline Drawing

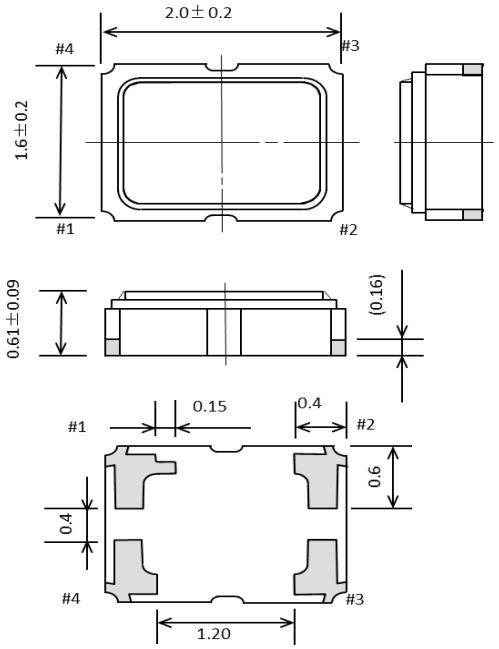

Typical Performance

Frequency / Temperature Characteristics

26 MHz

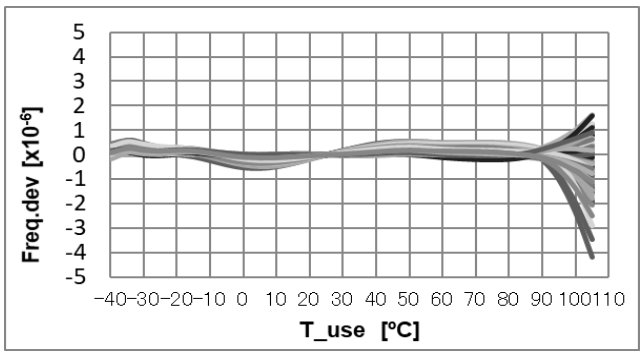

49.58 MHz

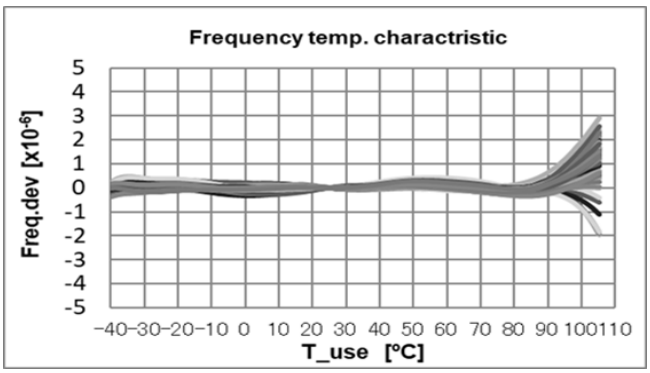

Terminal Assignment

Pin #	Connection	
1	N.C.	(TCXO)
	Vc	(VC-TCXO)
	$\overline{ST}$	(Standby)
2	GND	
3	OUT	
4	V_{CC}	

[1] Product Number / Product Name

(1-1) Product Number

X1G005371xxxx16 (Please contact Epson for details)

(1-2) Product Name (Standard Form)

TG2016 SLN 26.000000MHz E W H S N M

① ② ③ ④⑤⑥⑦⑧⑨

①Model（TG2016xLN） ②Output (S: Clipped sine wave) ③Frequency

④Supply voltage (Refer to symbol table)

⑤Frequency / temperature characteristics (C: ±0.5 x 10^{-6} Max., W: ±0.5 x 10^{-6} Max. and ±5.0 x 10^{-6} Max.)

⑥Operating temperature (H: -40 °C to +105 °C, G: -40 °C to +85 °C) ⑦Standby function (N: Non, S: Standby)

⑧VC function (Refer to symbol table, N: Non for TCXO, Standby mode) ⑨Internal identification code (“M” is default)

Symbol table	Suffix symbol: Voltage (Typ.) [V]			
④Vcc:	E: 1.8	B: 2.8	A: 3.0	C: 3.3
⑧V_C: VC-TCXO only	B: 0.9	C: 1.4	D: 1.5	E: 1.65

(2) Product Number / Ordering Code Please refer to the web site for the latest information

Frequency	Part number			
[MHz]	±0.5 x10^{-6} (-40 to +105 ºC)		±0.5 x10^{-6} (-40 to +85 ºC), ±5.0 x10^{-6} (+85 to +105 ºC) Standby function	
	V_{CC} = 1.8 V Suffix: ECHNNM	V_{CC} = 3.3 V Suffix: CCHNNM	V_{CC} = 1.8 V Suffix: EWHSNM	V_{CC} = 3.3 V Suffix: CWHSNM
26	X1G005731210116	X1G005731220116	X1G005731070116	X1G005731080116
38.4	In preparation	In preparation	X1G005731070216	X1G005731080216
49.58	-	-	In preparation	In preparation
32	-	-	In preparation	In preparation

[2] Absolute Maximum Ratings

Parameter	Symbol	Specifications			Unit	Conditions
		Min.	Typ.	Max.		
Supply voltage	V_{CC}-GND	-0.5	-	+4.0	V	
Frequency control voltage	Vc-GND	-0.3	-	V_{CC} + 0.3	V	Vc Terminal
Input voltage	V_{IN}	-0.3	-	V_{CC} + 0.3	V	$\overline{ST}$ Terminal
Storage temperature range	T_stg	-40	-	+105	°C	Storage as single product

[3] Recommended Operating Conditions

Parameter	Symbol	Specifications			Unit	Conditions
		Min.	Typ.	Max.		
Supply voltage	V_{CC}	1.7	1.8	1.9	V	V_{CC} = 1.8 V ± 0.1 V
		2.66	2.8	2.94	V	V_{CC} = 2.8 V ± 5 %
		2.85	3.0	3.15	V	V_{CC} = 3.0 V ± 5 %
		3.135	3.3	3.465	V	V_{CC} = 3.3 V ± 5 %
Supply voltage	GND	0	-	0	V	
Frequency control voltage	Vc	GND	N.C.	—	V	Vc Terminal / TCXO
		0.3	0.9	1.5	V	Vc = 0.9 V ± 0.6 V
		0.4	1.4	2.4	V	Vc = 1.4 V ± 1.0 V
		0.5	1.5	2.5	V	Vc = 1.5 V ± 1.0 V
		0.65	1.65	2.65	V	Vc = 1.65 V ± 1.0 V
Operating temperature range	T_use	-40	+25	+85	°C	Standard
		-40	+25	+105	°C	option
Output load	Load_R	9	10	11	kΩ	
	Load_C	9	10	11	pF	
	Cc	0.01	-	-	μF	DC-cut capacitor *

* DC-cut capacitor is not included in this TCXO. Please attach an external DC-cut capacitor to the out pin.

[4] Frequency Characteristics

(4-1) Frequency Characteristics

(V_{CC} = Typ., Vc = Typ., Output Load = 10 kΩ // 10 pF, T_use = +25 °C)

Parameter	Symbol	Specifications			Unit	Conditions
		Min.	Typ.	Max.		
Output Frequency	fo	10	-	55.2	MHz	Standard Frequency
		26, 32, 38.4, 49.58				
Frequency tolerance	f_tol	-1.0	-	+1.0	$x10^{-6}$	T_use = +25 °C ± 2 °C Before reflow
Frequency tolerance *1	f_tol	-2.0	-	+2.0	$x10^{-6}$	T_use = +25 °C ± 2 °C After reflow *2
Frequency / temperature characteristics	fo-Tc	-0.5	-	+0.5	$x10^{-6}$	T_use = -40 °C to +85 °C (Reference to +25 °C)
		-5	-	+5	$x10^{-6}$	Option T_use = +85 °C to +105 °C
Frequency / load coefficient	fo-Load	-0.1	-	+0.1	$x10^{-6}$	Load ± 10 %
Frequency / voltage coefficient	fo-V_{CC}	-0.2	-	+0.2	$x10^{-6}$	V_{CC} ± 5 % *3
Frequency aging_1 year *4	f_age_1y	-1.0	-	+1.0	$x10^{-6}$	fo ≤ 40 MHz,
Frequency aging_3 year	f_age_3y	-1.5	-	+1.5	$x10^{-6}$	
Frequency aging_5 year	f_age_5y	-2.0	-	+2.0	$x10^{-6}$	
Frequency aging_10 year	f_age_10y	-3.5	-	+3.5	$x10^{-6}$	
Frequency aging_1year *4	f_age_1y	-1.5	-	+1.5	$x10^{-6}$	fo > 40 MHz
Frequency aging_3 year	f_age_3y	-2.5	-	+2.5	$x10^{-6}$	
Frequency aging_5 year	f_age_5y	-3	-	+3	$x10^{-6}$	
Frequency aging_10 year	f_age_10y	-5	-	+5	$x10^{-6}$	
Acceleration sensitivity	-	-	-	1.5	$x10^{-9}$ /g	3 axes, 30 Hz to 3 000 Hz

*1 Include initial frequency tolerance and frequency deviation after reflow cycles.
*2 Measured in the elapse of 24 hours after reflow soldering.
*3 Vcc ± 5 % must be in operating supply voltage range (1.7 V to 3.63 V)
*4 Aging stability is estimated from environmental reliability tests; expected amount of the frequency variation.

(4-2) Frequency Control Characteristics *4

(V_{CC} = Typ., Vc = Typ., Output Load = 10 kΩ // 10 pF, T_use = +25 °C)

Parameter	Symbol	Specifications			Unit	Conditions
		Min.	Typ.	Max.		
Frequency control range	f_cont	-12.0	-	-8.0	$x10^{-6}$	B: Vc = 0.9 V - 0.6 V at V_{CC} = 1.8 V C: Vc = 1.4 V - 1.0 V at V_{CC} = 2.8 V D: Vc = 1.5 V - 1.0 V at V_{CC} = 3.0 V E: Vc = 1.65 V - 1.0 V at V_{CC} = 3.3 V
		+8.0	-	+12.0	$x10^{-6}$	B: Vc = 0.9 V + 0.6 V at V_{CC} = 1.8 V C: Vc = 1.4 V + 1.0 V at V_{CC} = 2.8 V D: Vc = 1.5 V + 1.0 V at V_{CC} = 3.0 V E: Vc = 1.65 V + 1.0 V at V_{CC} = 3.3 V
		-15	-		$x10^{-6}$	E: Vc = 1.65 V - 1.5 V at V_{CC} = 3.3 V
			-	+15	$x10^{-6}$	E: Vc = 1.65 V + 1.5 V at V_{CC} = 3.3 V
Input impedance	Zin	500	-	-	kΩ	Vc-GND(DC)
Frequency change polarity	-	Positive polarity			-	

*4 VC-TCXO only

[5] Electrical Characteristics

(V_{CC} = Typ., Vc = Typ., Output Load = 10 kΩ // 10 pF, T_use = +25 °C)

Parameter	Symbol	Specifications			Unit	Conditions
		Min.	Typ.	Max.		
Current consumption	I_{CC}	-	-	1.5	mA	10 MHz ≤ fo ≤ 26 MHz (-40 to +85 °C)
		-	-	1.7	mA	10 MHz ≤ fo ≤ 26 MHz (-40 to +105 °C)
		-	-	2.0	mA	26 MHz < fo ≤ 38.4 MHz (-40 to +105 °C)
		-	-	2.5	mA	38.4 MHz < fo ≤ 55.2 MHz (-40 to +105 °C)
Output voltage	Vpp	0.8	-	1.5	Vp-p	Peak to peak voltage
Start-up time	t_str	-	-	1.0	ms	Until output signal has been reached min 90 % of final amp. (-40 °C to +105 °C)
		-	-	2.0	ms	Until frequency has been reached within ±0.5 x 10^{-6} (-40 °C to +85 °C) within ±5.0 x 10^{-6} (+85 °C to +105 °C)
Symmetry	SYM	45	50	55	%	GND level (DC-cut)
Harmonics	Hm	-	-	-10.0	dBc	
Phase noise (fo = 26 MHz) *	L(f)	-	-61	-	dBc/Hz	1 Hz offset
		-	-90	-		10 Hz offset
		-	-115	-		100 Hz offset
		-	-137	-		1 kHz offset
		-	-155	-		10 kHz offset
		-	-161	-		100 kHz offset
		-	-162	-		1 MHz offset

* For other frequencies, refer to Charts (6-8), Phase Noise

Stand-by current	I_std	-	-	3	μA	$\overline{ST}$ = GND
Input voltage	V_{IH}	80 % V_{CC}	-	-	V	$\overline{ST}$ terminal
	V_{IL}	-	-	20 % V_{CC}	V	$\overline{ST}$ terminal
Output disable time (ST)	t_stp_st	-	-	150	ns	$\overline{ST}$ terminal: High to Low
Output enable time (ST)	t_sta_st	-	-	2	ms	$\overline{ST}$ terminal: Low to High

[6] Characteristic Data

(6-1) Frequency / Temperature Characteristics & Frequency Slope

26 MHz (n = 80 pcs)

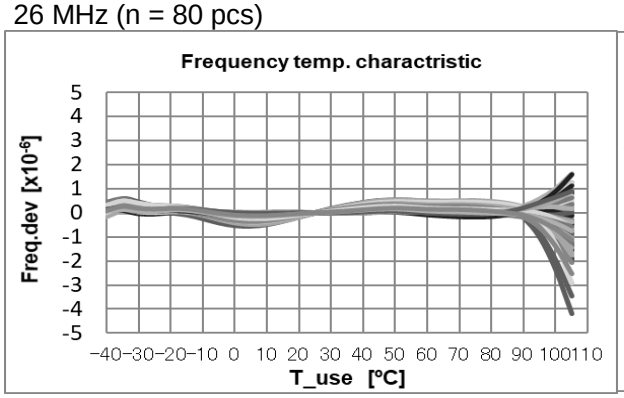

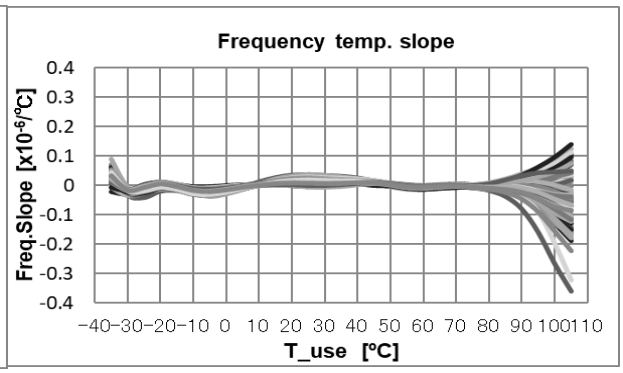

38.4 MHz (n = 80 pcs)

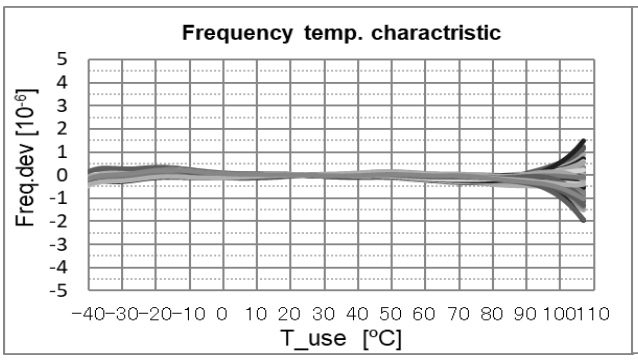

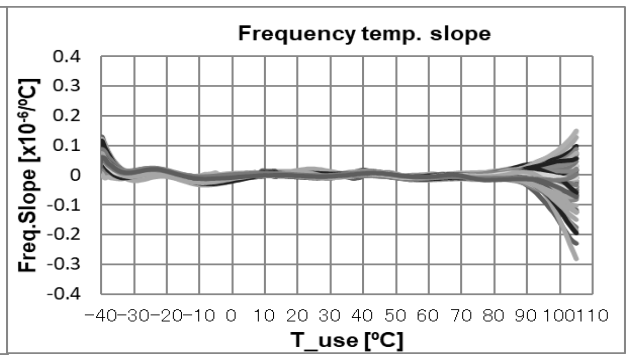

49.58 MHz (n = 80 pcs)

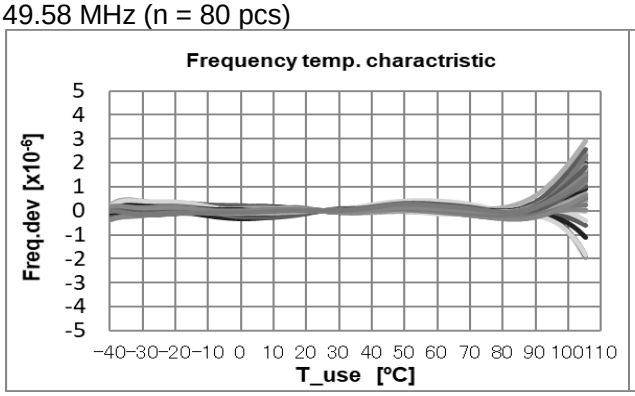

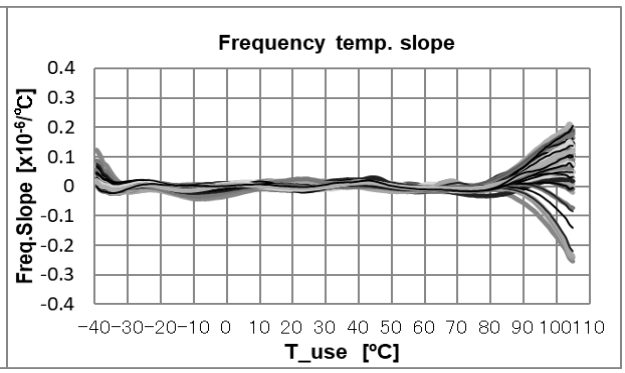

(6-2) Frequency / Load Coefficient & Frequency / Voltage Coefficient

55MHz (V_{CC} = 1.7 V, 3.63 V, T_use = 25 °C, n = 3 pcs)

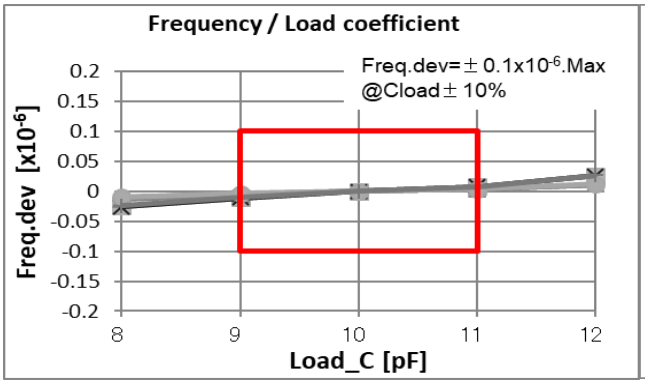

26MHz (V_{CC} = 1.8 V center, T_use = 25 °C, n = 3 pcs)

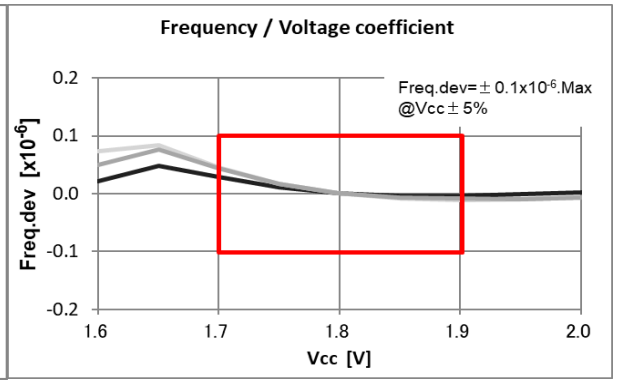

(6-3) Frequency Aging T_use = 25 °C Conversion

*Aging stability is estimated from environmental reliability tests; expected amount of the frequency variation.
This does not intend to guarantee the product-life cycle.

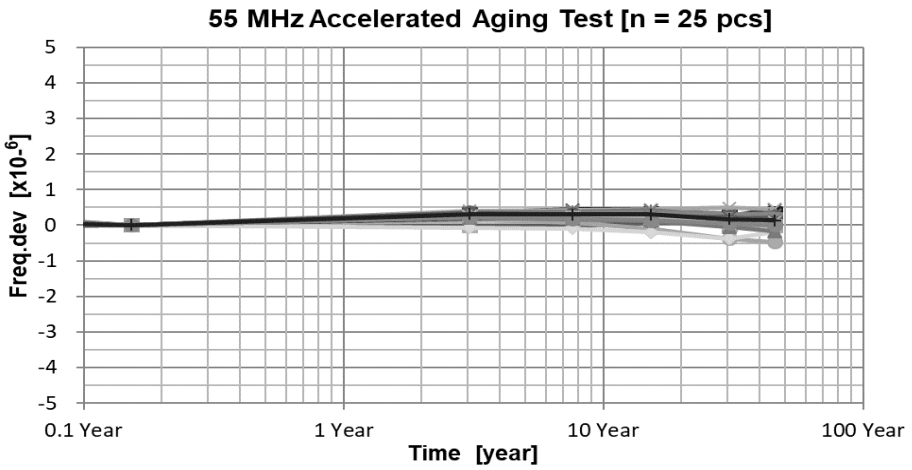

(6-4) G sensitivity (10 Hz to 10 kHz under sinusoidal vibration, n = 3 pcs)

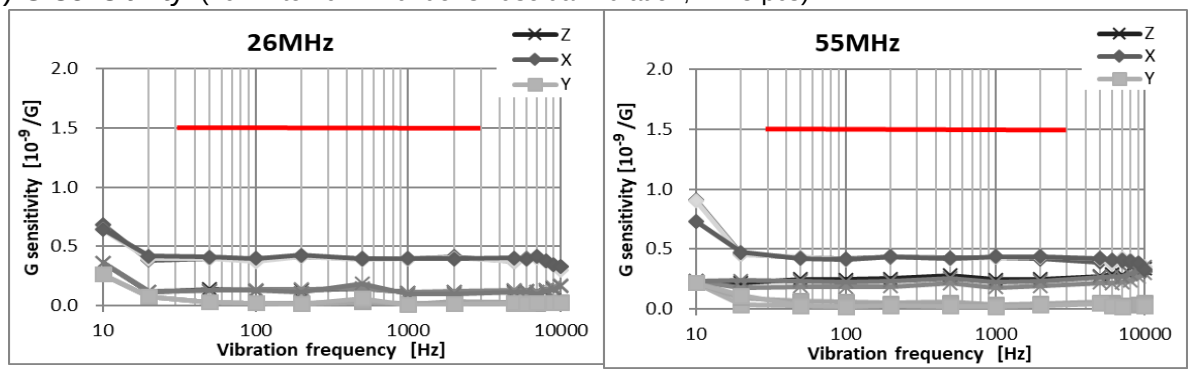

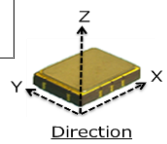

(6-5) Frequency Control Range (26 MHz, T_use = 25 °C, VC-TCXO only)

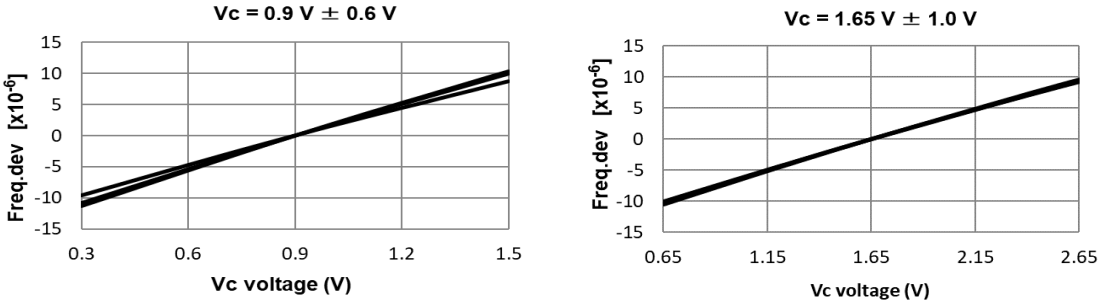

(6-6) Current Consumption & Output Voltage

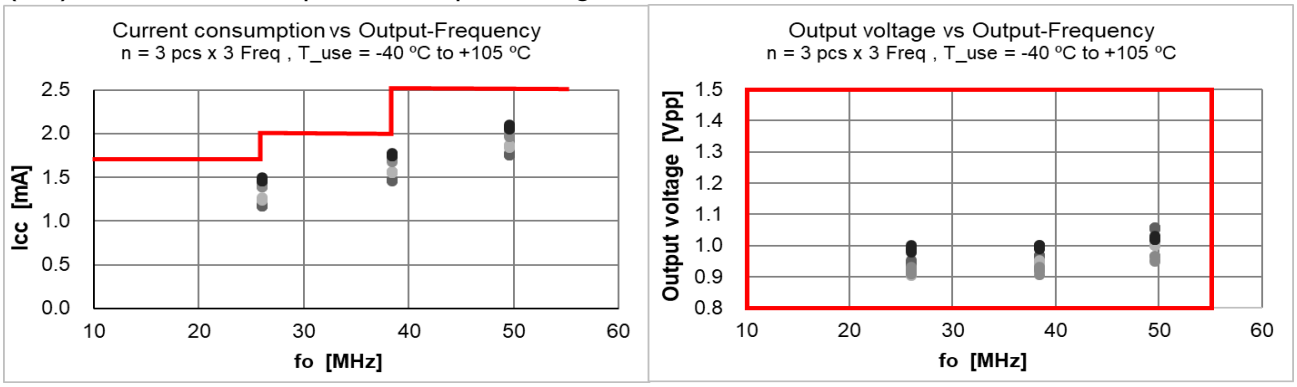

(6-7) Start-up time (T_use = 25 °C, X axis Scale = 0.5 msec/div)

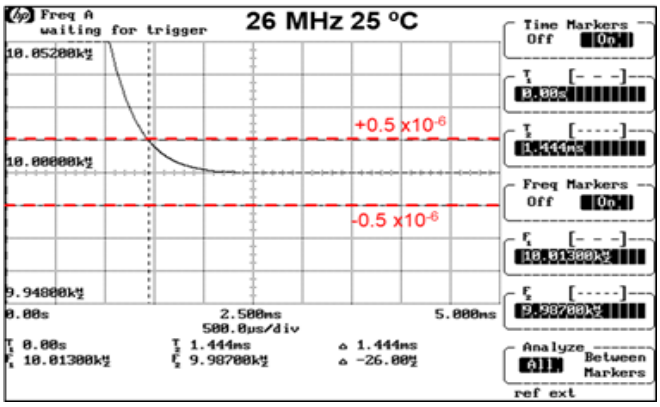

(6-8) Phase Noise

(1) fo = 26 MHz, T use = +25 °C, n = 10 pcs

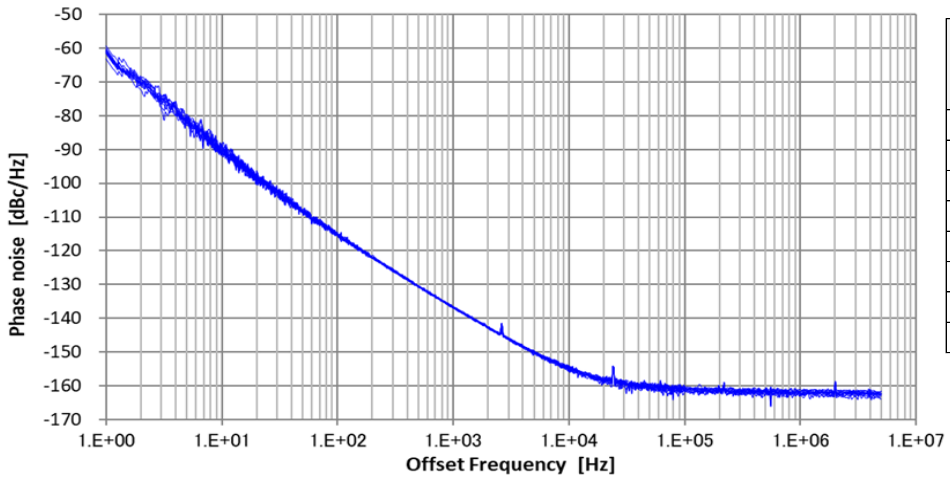

Offset Freq. [Hz]	Phase noise [dBc/Hz]
1 Hz	-61
10 Hz	-90
100 Hz	-115
1 kHz	-137
10 kHz	-155
100 kHz	-161
1 MHz	-162
5 MHz	-162

(2) fo = 38.4 MHz, T_use = +25 °C, n = 10 pcs

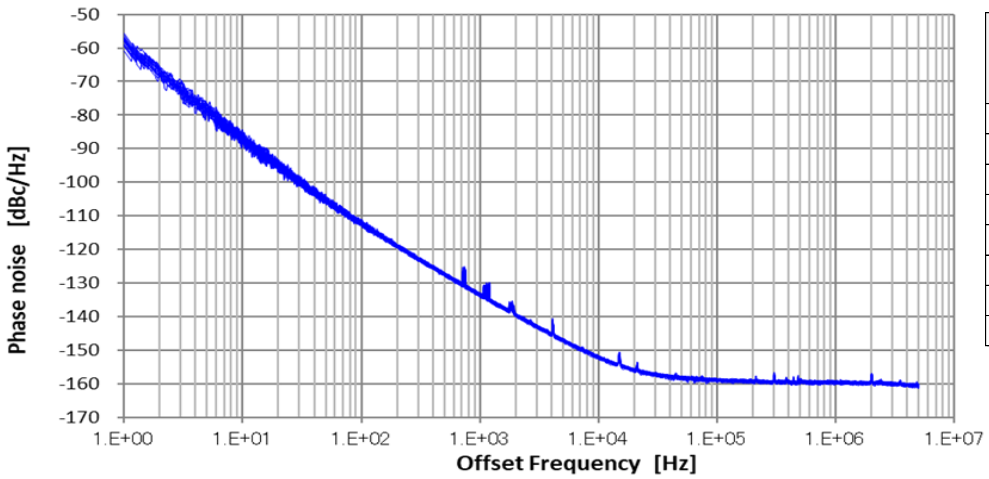

Offset Freq. [Hz]	Phase noise [dBc/Hz]
1 Hz	-57
10 Hz	-87
100 Hz	-112
1 kHz	-133
10 kHz	-152
100 kHz	-159
1 MHz	-160
5 MHz	-161

(3) fo = 49.58 MHz, T_use = +25 °C, n = 10 pcs

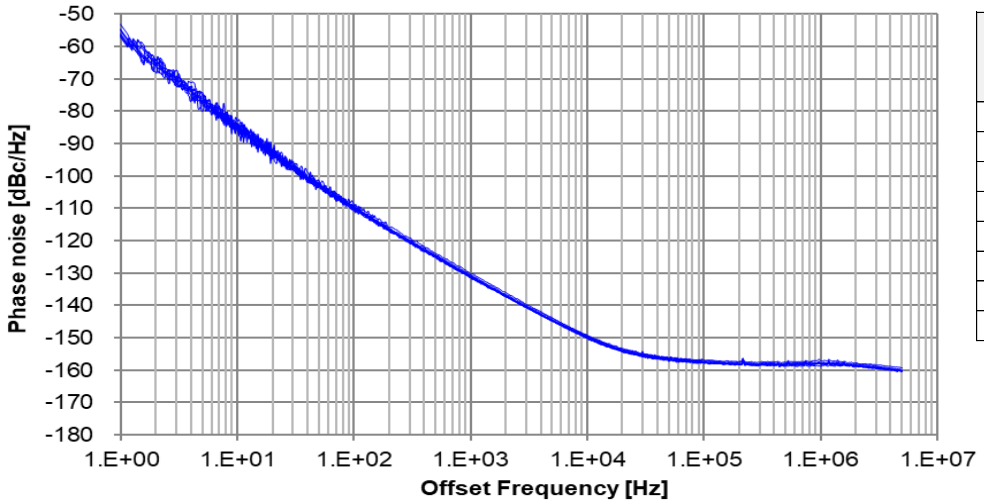

Offset Freq. [Hz]	Phase noise [dBc/Hz]
1 Hz	-56
10 Hz	-85
100 Hz	-110
1 kHz	-131
10 kHz	-150
100 kHz	-157
1 MHz	-158
5 MHz	-160

(4) fo = 55 MHz, T_use = +25 °C, n = 3 pcs

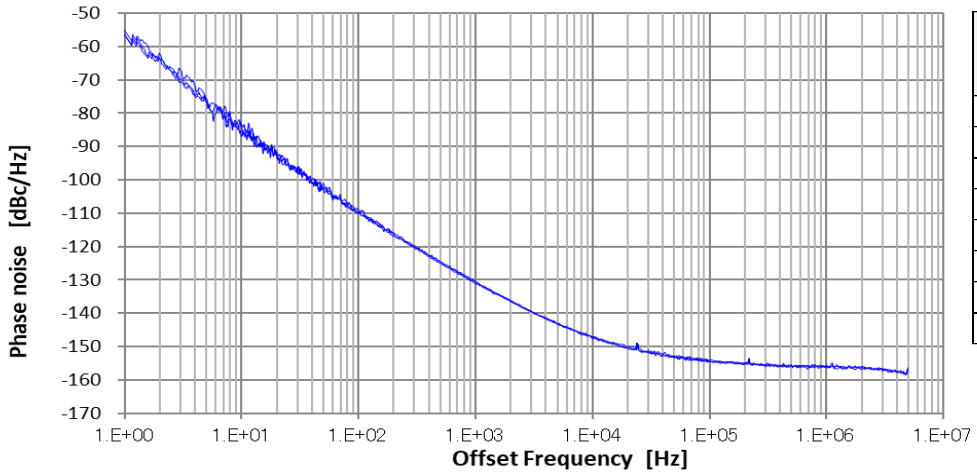

Offset Freq. [Hz]	Phase noise [dBc/Hz]
1 Hz	-56
10 Hz	-84
100 Hz	-110
1 kHz	-131
10 kHz	-147
100 kHz	-155
1 MHz	-156
5 MHz	-157

(6-9) Short Term Stability T_use = +25 °C

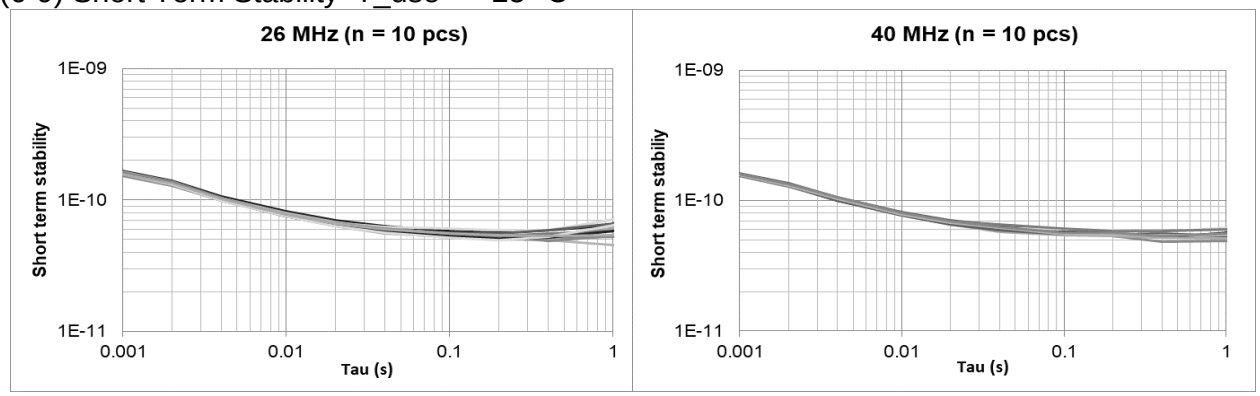

[7] Test circuit

(7-1) Wave form : Load = 10 kΩ // 10 pF

(1)TCXO Connection Example

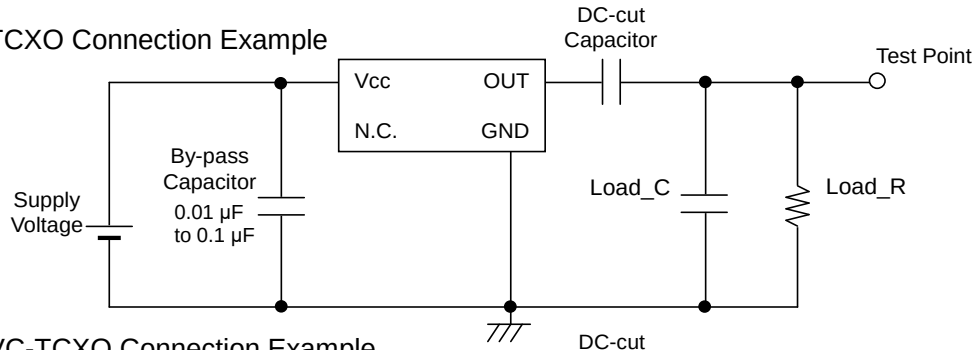

(2)VC-TCXO Connection Example

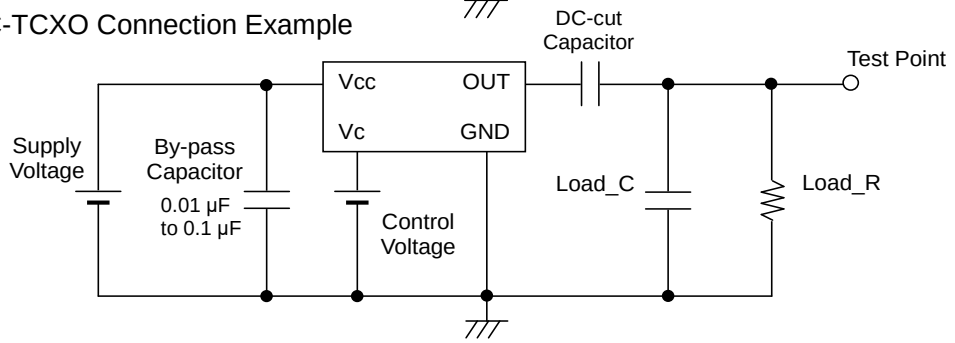

(3)TCXO-Standby Connection Example

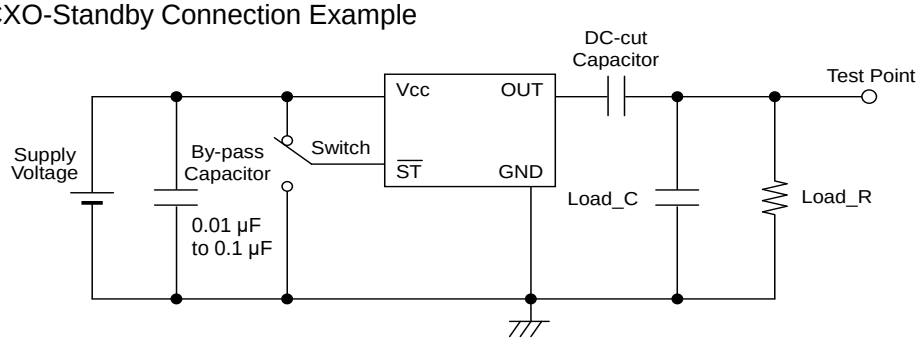

(7-2) Current Consumption

(1)TCXO Connection Example

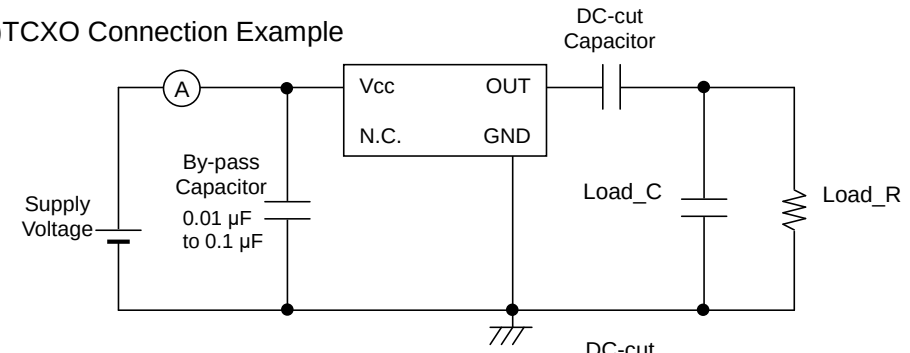

(2)VC-TCXO Connection Example

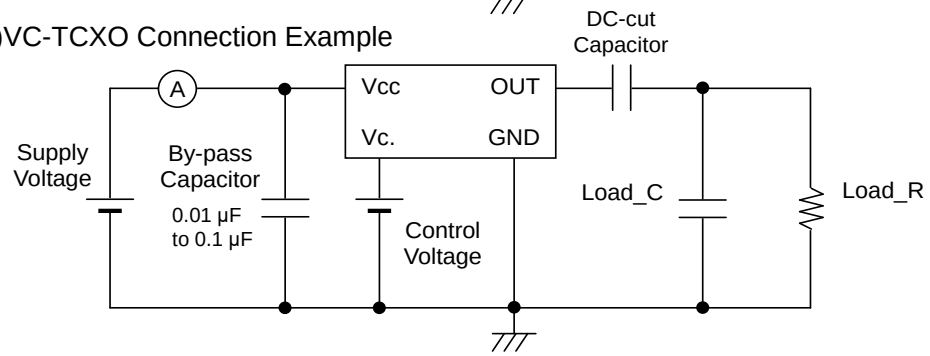

(3)TCXO-Standby Connection Example

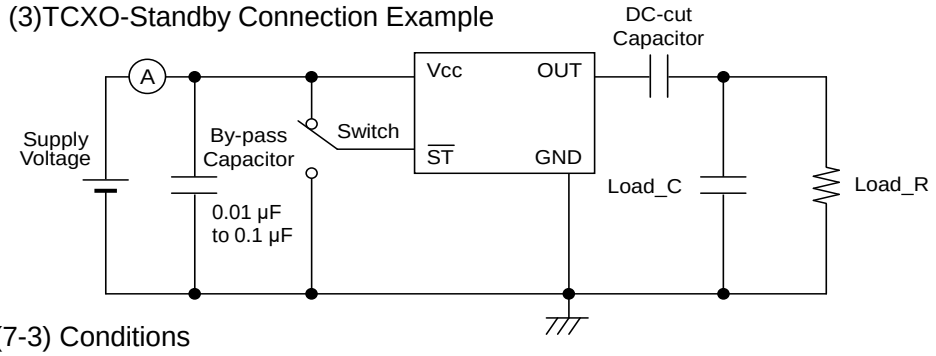

(7-3) Conditions

1. Oscilloscope: Impedance Min. 1 MΩ
   Input capacitance Max. 10 pF
   Band width Min. 300 MHz
   Impossible to measure both frequency and wave form at the same time.
   (In case of using oscilloscope's amplifier output, possible to measure both at the same time.)
2. Load_C includes probe capacitance.
3. A capacitor (By-pass: 0.01 μF to 0.1 μF) is placed between V_{CC} and GND,and closely to TCXO.
4. Use the current meter whose internal impedance value is small.
5. Power Supply
   ・Impedance of power supply should be as low as possible.
6. GND pin should be connected to low impedance GND.

(7-4) Timing Chart

(1) Standby Function and Timing

Standby input	Osc. Circuit	Output status
High or OPEN	Oscillation	Specified frequency output: Enable
Low	Stop	Output becomes high impedance: Disable

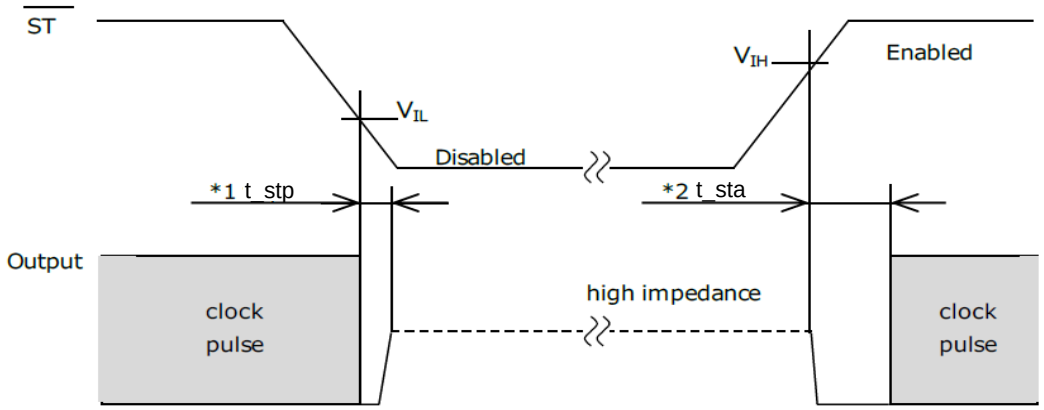

*1 t_stp_st: The time from $\overline{ST}$ =V_{IL} to output = disable (high impedance)
*2 t_sta_st: The time from $\overline{ST}$ =V_{IH} to starting output

(2) Standby Control Timing

When standby control and V_{CC} control are different

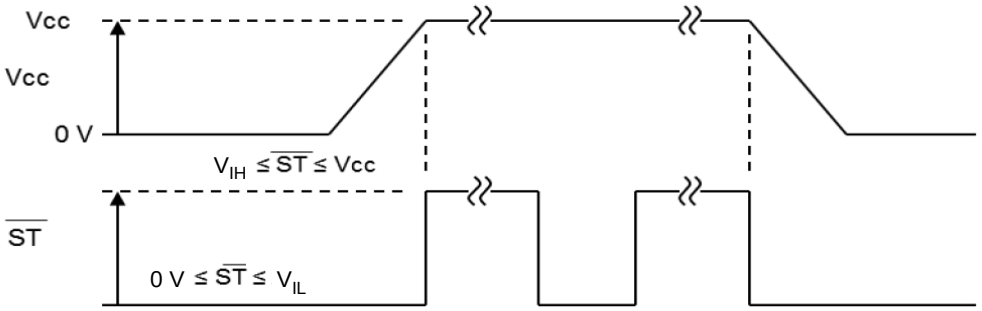

When standby control and V_{CC} control are the same

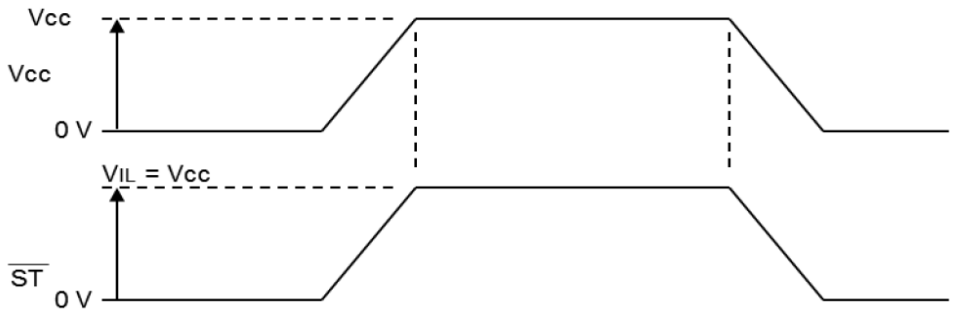

[8] Outline Drawing unit:mm

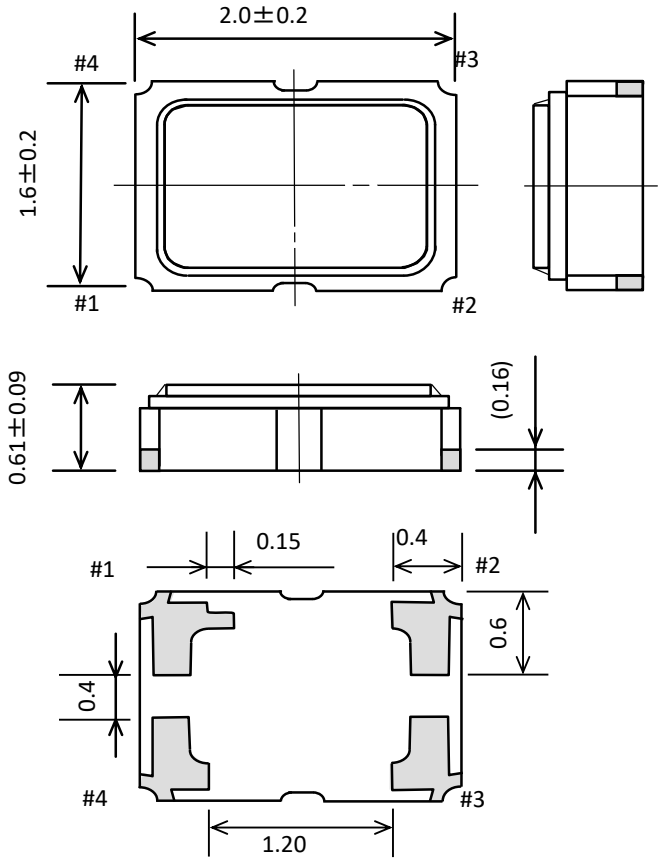

Terminal coating: Au plating
Reference weight Typ.: 8.1 mg

Recommended Foot Print unit:mm

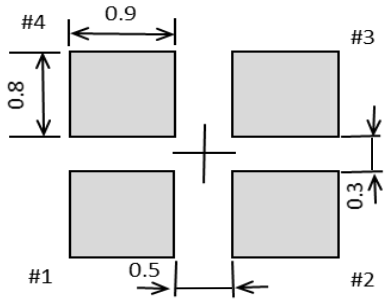

Pin #	Connection	
1	N.C.	(TCXO)
	Vc	(VC-TCXO)
	$\overline{ST}$	(Standby)
2	GND	
3	OUT	
4	V_{CC}	

Please keep “N.C.” pin OPEN condition or GND connection.
"N.C." pin doesn’t work as a ground pin.

For stable operation, please add a bypass capacitor(0.01 uF to 0.1 uF) between V_{CC} and GND. Please place it as close to TCXO as possible.

Please do not place any pattern between footprint pads.

[9] Marking

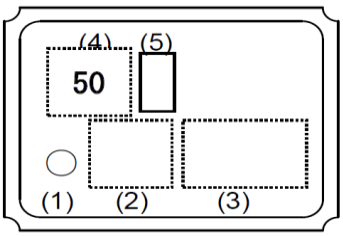

(1) 1Pin Mark
(2) Arbitrary marking area (2 digits)
(3) TCXO Lot No. (3 digits)
(4) TCXO model ID
(5) Image recognition mark

Model ID Example

Freq.[MHz] / Vcc [V]	(4) model ID
26 / 1.8	5A1
26 / 3.3	5A2
38.4 / 1.8	5A3
38.4 / 3.3	5A4

[10] Moisture Sensitivity Level , Electro-Static Discharge

(1)Moisture Sensitivity Level (MSL)

Parameter	Specifications	Conditions
MSL	LEVEL1	JEDEC J-STD-020D

(2)Electro-Static Discharge (ESD)

Parameter	Specifications	Conditions
Human Body Model (HBM)	2 000 V Min.	IEC 60749-26 Ed.2.0:2006(b) 100 pF,1.5 kΩ, 3 times
Machine Model (MM)	200 V Min.	IEC 60749-26 Ed.2.0:2006(b) 200 pF, 0 Ω, 1 time

[11] Reflow Profile (follow to IPC / JEDEC J-STD-020D.1)

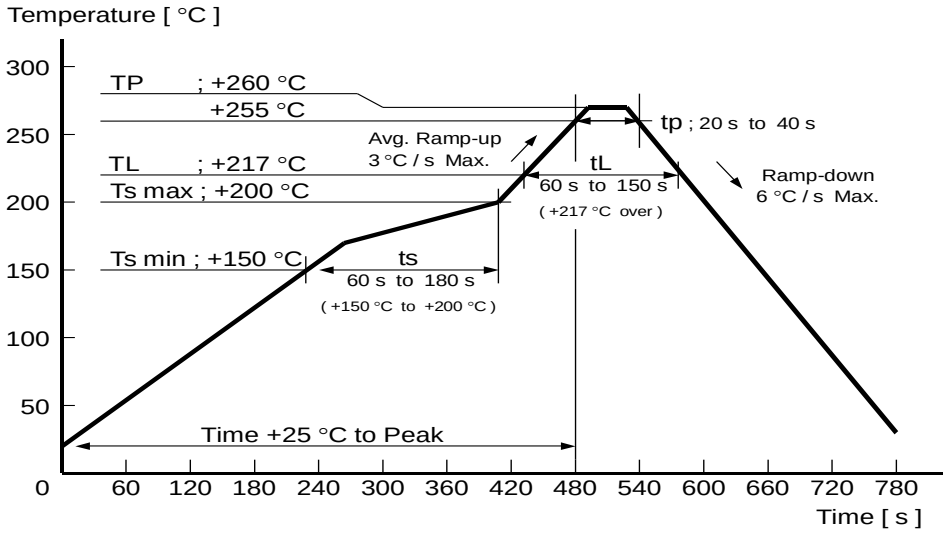

[12] Packing Information

(12-1) Product number last 2 digits code(25) define Quantity. The standard is "16", 3 000 pcs/Reel.
X1G005731xxxx16

(12-2) Taping Specification Subject to EIA-481 & IEC-60286 & JIS C0806

(1) Tape Dimensions TE0804L

Material of the Carrier Tape : PS / Material of the Top Tape : PET+PE

unit:mm

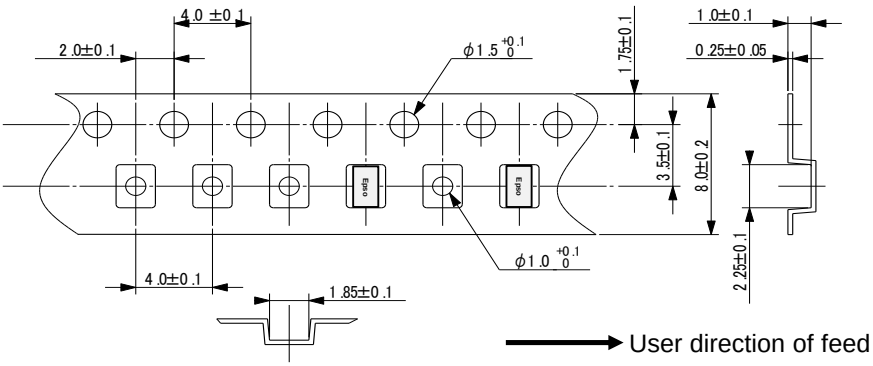

(2) Reel Dimensions

Center material : PS

Material of the Reel : PS

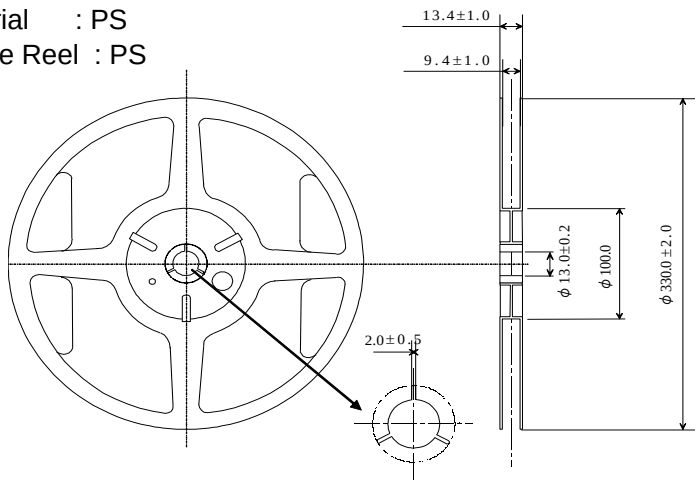

[13] Handling Precautions

Prior to using this product, please carefully read the section entitled “Precautions” on our Web site (https://www.epsondevice.com/crystal/ja/support/precaution/) for instructions on how to handle and use the product properly to ensure optimal performance of the product in your equipment.
Before using the product under any conditions other than those specified therein, please consult with us to verify and confirm that the performance of the product will not be negatively affected by use under such conditions.
In addition to the foregoing precautions, in order to avoid the deteriorating performance of the product, we strongly recommend that you DO NOT use the product under ANY of the following conditions:

(1) Do not expose this product to excessive mechanical shock or vibration.
(2) This product can be damaged by mechanical shock during the soldering process depending on the equipment used, process conditions, and any impact forces experienced. Always follow appropriate procedures, particularly when changing the assembly process in anyway and be sure to follow applicable process qualification standards before starting production.
(3) These devices are sensitive to ESD, please use appropriate precautions during handling, assembly, test, shipment, and installation.
(4) This product contains semiconductor content that should not be exposed to electromagnetic waves.
(5) The use of ultrasonic technology for cleaning, bonding, etc. can damage the Xtal unit inside this product. Please carefully check for this consideration before using ultrasonic equipment for volume production with this product.
(6) Noise and ripple on the power supply may have undesirable affects on operation and cause degradation of phase noise characteristics. Evaluate the operation of this device with appropriate power supplies carefully before use.
(7) When applying power, ensure that the supply voltage increases monotonically for proper operation. On power down, do not reapply power until the supplies, bypass capacitors, and any bulk capacitors are completely discharged since that may cause the unit to malfunction.
(8) Aging specifications are estimated from environmental reliability tests and expected frequency variation over time. They do not provide a guarantee of aging over the product lifecycle.
(9) The metal cap on top of the device is directly connected to the GND terminal (pin #2). Take necessary precautions to prevent any conductor not at ground potential from contacting the cap as that could cause a short circuit to
(10) Do not route any signal lines, supply voltage lines, or GND lines underneath the area where the oscillators are mounted including any internal layers and on the opposite side of the PCB. To avoid any issues due to interference of other signal lines, please take care not to place signal lines near the product as this may have an adverse affect on the performance of the product.
(11) A bypass capacitor of the recommended value(s) must be connected between the V_{CC} and GND terminals of the product. Whenever possible, mount the capacitor(s) on the same side of the PCB and as close to the product as possible to keep the routing traces short.
(12) Power supply connections to V_{CC} and GND pins should be routed as thick as possible while keeping the high frequency impedance low in order to get the best performance.
(13) The use of a filter or similar element in series with the power supply connections to protect from electromagnetic radiation noise may increase the high frequency impedance of the power supply line and may cause the oscillator to not operate properly. Please verify the design to ensure sufficient operational margin prior to use.
(14) Keep PCB routing from the output terminal(s) to the load as short as possible for best performance.
(15) Do not short the output to GND as that will damage the product. Always use with an appropriate load resistor connected.
(16) Product failures during the warranty period only apply when the product is used according to the recommended operating conditions described in the specifications. Products that have been opened for analysis or damaged will not be covered. It is recommended to store and use in normal temperature and humidity environments described in the specifications to ensure frequency accuracy and prevent moisture condensation. If the product is stored for more than one year, please confirm the pin solderability prior to use.
(17) If the oscillation circuit is exposed to condensation, the frequency may change or oscillation may stop. Do not use in any conditions where condensation occurs.
(18) Do not store or use the product in an environment where it can be exposed to chemical substances that are corrosive to metal or plastics such as salt water, organic solvents, chemical gasses, etc. Do not use the product when it is exposed to sunlight, dust, corrosive gasses, or other materials for long periods of time.
(19) When using water-soluble solder flux make sure to completely remove the flux residue after soldering. Pay particular attention when the residues contain active halogens which will negatively affect the product and its performance.
(20) Terminals on the side of the product are internally connected to the IC, be careful not to cause short-circuits or reduce the insulation resistance of them in any way.

Should any customer use the product in any manner contrary to the precautions and/or advice herein, such use shall be done at the customer’s own risk.

PROMOTION OF ENVIRONMENTAL MANAGEMENT SYSTEM CONFORMING TO INTERNATIONAL STANDARDS

At Seiko Epson, all environmental initiatives operate under the Plan-Do-Check-Action (PDCA) cycle designed to achieve continuous improvements. The environmental management system (EMS) operates under the ISO 14001 environmental management standard.

All of our major manufacturing and non-manufacturing sites, in Japan and overseas, completed the acquisition of ISO 14001 certification.

ISO 14000 is an international standard for environmental management that was established by the International Standards Organization in 1996 against the background of growing concern regarding global warming, destruction of the ozone layer, and global deforestation.

WORKING FOR HIGH QUALITY

In order provide high quality and reliable products and services than meet customer needs, Seiko Epson made early efforts towards obtaining ISO9000 series certification and has acquired ISO9001 for all business establishments in Japan and abroad. We have also acquired IATF 16949 certification that is requested strongly by major manufacturers as standard.

IATF 16949 is the international standard that added the sector-specific supplemental requirements for automotive industry based on ISO9001.

■ Explanation of marks used in this datasheet

Pb Free	**●Pb free.**
RoHS Compliant	**●Complies with EU RoHS directive.** *About the products without the Pb-free mark. Contains Pb in products exempted by EU RoHS directive (Contains Pb in sealing glass, high melting temperature type solder or other)

NOTICE: PLEASE READ CAREFULLY BELOW BEFORE THE USE OF THIS DOCUMENT

1. The content of this document is subject to change without notice. Before purchasing or using Epson products, please contact with sales representative of Seiko Epson Corporation (“Epson”) for the latest information and be always sure to check the latest information published on Epson’s official web sites and resources.
2. This document may not be copied, reproduced, or used for any other purposes, in whole or in part, without Epson’s prior consent.
3. Information provided in this document including, but not limited to application circuits, programs and usage, is for reference purpose only. Epson makes no guarantees against any infringements or damages to any third parties’ intellectual property rights or any other rights resulting from the information. This document does not grant you any licenses, any intellectual property rights or any other rights with respect to Epson products owned by Epson or any third parties.
4. Epson has prepared this document carefully to be accurate and dependable, but Epson does not guarantee that the information is always accurate and complete. Epson assumes no responsibility for any damages you incurred due to any misinformation in this document.
5. Epson products listed in this document and our associated technologies shall not be used in any equipment or systems that laws and regulations in Japan or any other countries prohibit to manufacture, use or sell. Furthermore, Epson products and our associated technologies shall not be used for the purposes of military weapons development (e.g. mass destruction weapons), military use, or any other military applications. If exporting Epson products or our associated technologies, please be sure to comply with the Foreign Exchange and Foreign Trade Control Act in Japan, Export Administration Regulations in the U.S.A (EAR) and other export-related laws and regulations in Japan and any other countries and to follow their required procedures.
6. Epson assumes no responsibility for any damages (whether direct or indirect) caused by or in relation with your non-compliance with the terms and conditions in this document or for any damages (whether direct or indirect) incurred by any third party that you give, transfer or assign Epson products.
7. For more details or other concerns about this document, please contact our sales representative.
8. Company names and product names listed in this document are trademarks or registered trademarks of their respective companies.

●Disclaimer

1. Epson products are designed for use in general electronic equipment applications that do not require extremely high reliability or safety.

2. Epson does not represent or warrant that its products will not cause a failure for any particular application, except for cases where the failure is a direct result caused by defects in materials and workmanship of this product.
   If a product fails due to defects in materials and workmanship, to the maximum extent permitted by law, we will, at our sole discretion, refund or replace the affected product.

3. When products for used directly or indirectly in certain devices or applications (ex. Nuclear power, aerospace, infrastructure facilities, medical equipment, etc.) which are connected to or affect safety of human life or property, Customer is solely responsible for determining if the products and respective specifications are suitable for the intended use in particular customer applications.
   Customer shall implement necessary and proper safety design and measures (including redundant design, malfunction prevention design, etc.) to ensure reliability and safety before using the products in/with customer’s Equipment.

4. No dismantling, analysis, reverse engineering, modification, alteration, adaptation, reproduction, etc., of Epson products is allowed. Furthermore, any defects caused by this are not covered by the warranty.

©Seiko Epson Corporation 2025