Voltage-Controlled Crystal Oscillator (VCXO)

· Package size (5.0 mm × 3.2 mm × 1.3 mm)
· Fundamental mode VCXO
· Output: LVDS
· Reference weight Typ.66 mg

[1] Product Number / Product Name / Marking

(1-1) Product Number / Ordering Code

X1G0054810008xx

Last 2 digits code(**xx**) defines Quantity.
The standard is "00", 1 000 pcs/Reel.

(1-2) Product Name / Model Name

VG5032VFN 100.000000MHz CJGHBA

[2] Absolute Maximum Ratings

Parameter	Symbol	Specifications			Unit	Conditions
		Min.	Typ.	Max.		
Maximum supply voltage	V_{CC}	-0.5	-	+5.0	V	-
Input voltage	Vc	-0.5	-	V_{CC} + 0.5	°C	Vc terminal
ECL load condition	L_LVDS	-	100	-	Ω	Connected between OUT and $\overline{OUT}$

[3] Operating Range

Parameter	Symbol	Specifications			Unit	Conditions
		Min.	Typ.	Max.		
Supply voltage	V_{CC}	3.135	3.3	3.465	V	-
	GND	0	0	0	V	-
Control voltage	Vc	0	1.65	3.3	V	-
Operating temperature range	T_use	-40	-	+85	°C	-
ECL load condition	L_ECL	-	50	-	Ω	Terminated to V_{CC} - 2.0 V

[4] Frequency Characteristics

(Unless stated otherwise [3] Operating Range)

Parameter	Symbol	Specifications			Unit	Conditions
		Min.	Typ.	Max.		
Output frequency	fo	-	100.000000	-	MHz	-
Frequency tolerance *1	f_tol	-50	-	+50	$\times 10^{-6}$	T_use

*1 Frequency tolerance includes Initial frequency tolerance, Frequency / temperature characteristics, Frequency / voltage coefficient and aging (10 years, +25 ºC)

[5] Frequency Control Characteristics

(Unless stated otherwise [3] Operating Range)

Parameter	Symbol	Specifications			Unit	Conditions
		Min.	Typ.	Max.		
Absolute pull range *1	APR	±50	-	-	$\times 10^{-6}$	-
Input impedance	Zin	10	-	-	MΩ	DC level
Linearity *2	FLIN	-	±5	±10	%	±3 dB
Modulation bandwidth	BW	10	15	-	kHz	-
Frequency change polarity	f_cp	Positive			-	-

*1 Absolute pull range = Frequency control range - Frequency tolerance

*2 Deviation from best linear fit.

[6] Electrical Characteristics

(Unless stated otherwise [3] Operating Range)

Parameter	Symbol	Specifications			Unit	Conditions
		Min.	Typ.	Max.		
Start-up time	t_str	-	-	10	ms	t = 0 at V_{CC} Min.
Current consumption	I_{CC}	-	-	60	mA	OE = V_{CC}, L_ECL = 50 Ω
Disable current	I_dis	-	-	25	mA	OE = GND
Output voltage (DC characteristics)	V_{OD}	250	350	450	mV	Differential output voltage
	dV_{OD}	-	-	50	mV	Change to V_{OD}
	V_{OS}	1.15	1.25	1.35	V	Offset voltage
	dV_{OS}	-	-	50	mV	Change to V_{OS}
Differential swing	V_{SW}	500	-	900	mV	Differential output peek to peek voltage
Rise/Fall time	tr	-	-	0.3	ns	20 % − 80 % of Differential output
Symmetry	SYM	45	50	55	%	at output crossing point
Input voltage	V_{IH}	70 % Vcc	-	-	V	OE terminal
	V_{IL}	-	-	30 % Vcc	V	OE terminal
Output disable time (OE)	tstp_oe	-	-	100	ns	OE terminal HIGH → LOW
Output enable time (OE)	tsta_oe	-	-	200	ns	OE terminal LOW → HIGH
Phase jitter	t_{PJ}	-	-	180	fs	Offset frequency: 12 kHz to 20 MHz

[7] External Dimensions / Footprint / Pin Map

(7-1) External Dimensions

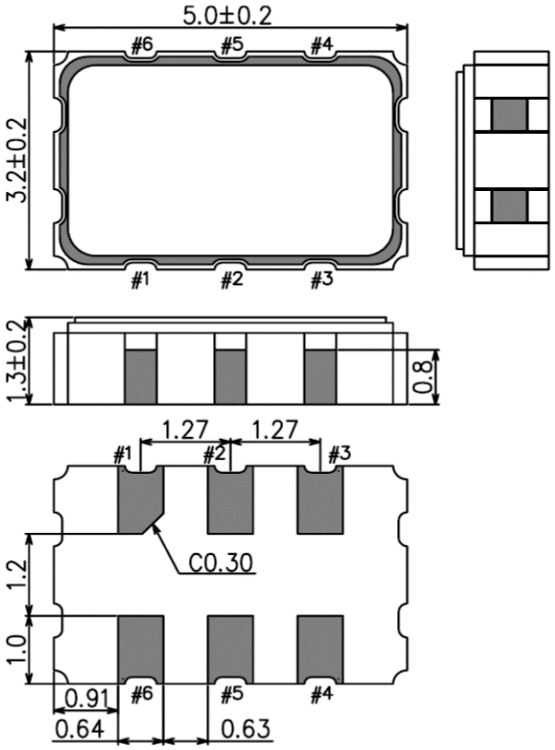

(7-2) Footprint

[Units: mm]

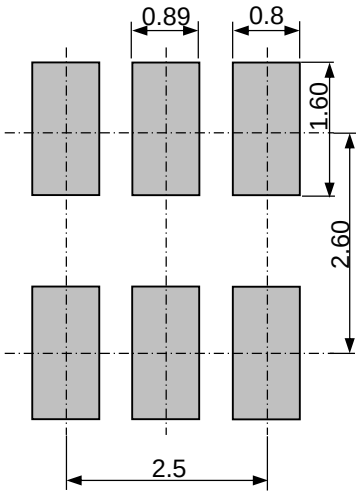

For stable operation, it is recommended that 0.01 µF to 0.1 µF bypass capacitors should be connected between V_{CC} and GND and placed as close to the V_{CC} pin as possible.

(7-3) Pin Map

Pin #	Connection	Function		
#1	Vc	Vc terminal		
#2	OE	OE terminal / active high		
		OE function	Osc. circuit	Output
		"H" or OPEN	Oscillation	Specified frequency: Enable
		"L"	Oscillation	High impedance: Disable
#3	GND	GND terminal		
#4	OUT	Output terminal (Positive)		
#5	$\overline{OUT}$	Output terminal (Negative)		
#6	V_{CC}	V_{CC} terminal		

[8] Packing Information

(8-1) Packing Quantity

The last two digits of the Product Number (X1G005481xxxx**xx**) are a code that defines the packing quantity. The standard is "00" for a 1 000 pcs/Reel.

(8-2) Taping Specification

Subject to EIA-481, IEC-60286 and JIS C0806

(1) Tape Dimensions

Carrier Tape Material: PS (Polystyrene)

Top Tape Material: PET (Polyethylene Terephthalate) Units: mm

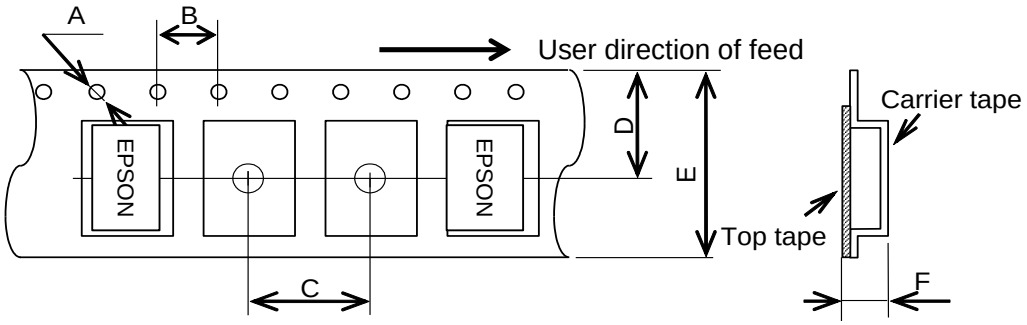

Symbol	A	B	C	D	E	F	G	H
Dimension	Φ1.5	4.0	8.0	7.25	12.0	1.7	3.5	5.4

(2) Reel Dimensions

Center Material: PS (Polystyrene)

Reel Material: PS (Polystyrene) Units: mm

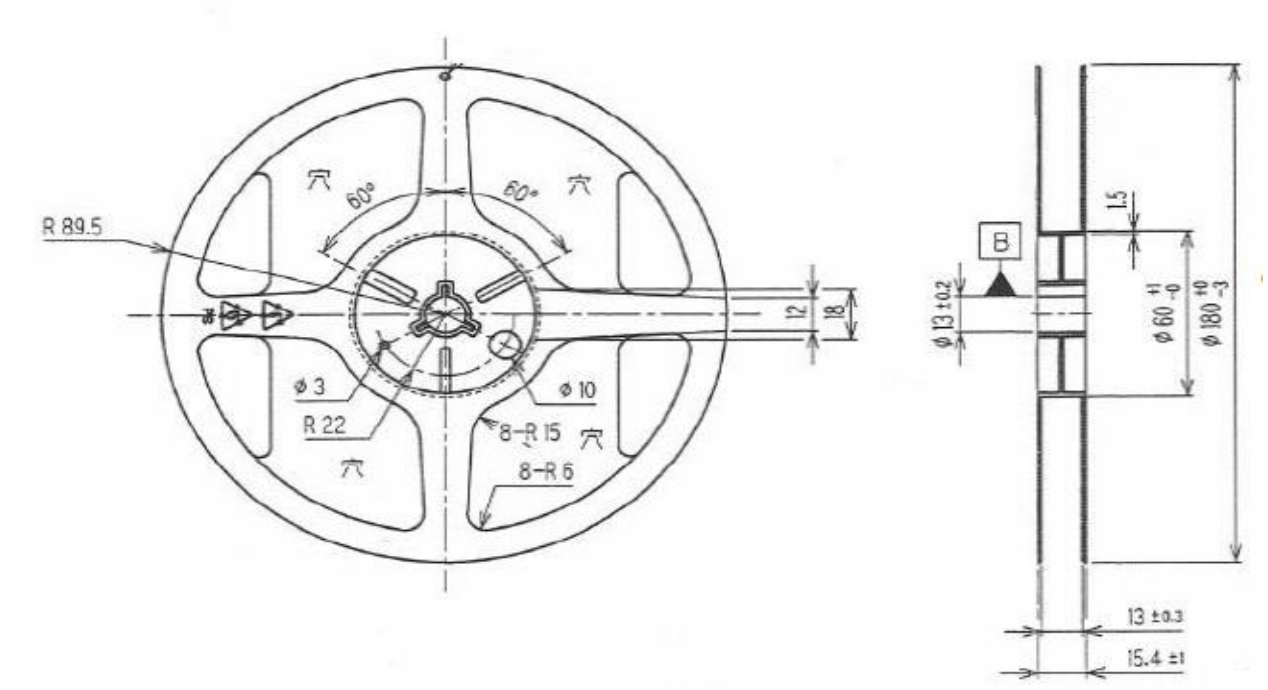

(3) Storage Environment

We recommend to keep at normal temperature and normal humidity in a packed condition.

NOTICE：PLEASE READ CAREFULLY BELOW BEFORE THE USE OF THIS DOCUMENT ©Seiko Epson Corporation

1. The content of this document is subject to change without notice. Before purchasing or using Epson products, please contact with sales representative of Seiko Epson Corporation (“Epson”) for the latest information and be always sure to check the latest information published on Epson’s official web sites and resources.
2. This document may not be copied, reproduced, or used for any other purposes, in whole or in part, without Epson’s prior consent.
3. Information provided in this document including, but not limited to application circuits, programs and usage, is for reference purpose only. Epson makes no guarantees against any infringements or damages to any third parties’ intellectual property rights or any other rights resulting from the information. This document does not grant you any licenses, any intellectual property rights or any other rights with respect to Epson products owned by Epson or any third parties.
4. Using Epson products, you shall be responsible for safe design in your products; that is, your hardware, software, and/or systems shall be designed enough to prevent any critical harm or damages to life, health or property, even if any malfunction or failure might be caused by Epson products. In designing your products with Epson products, please be sure to check and comply with the latest information regarding Epson products (including, but not limited to this document, specifications, data sheets, manuals, and Epson’s web site). Using technical contents such as product data, graphic and chart, and technical information, including programs, algorithms and application circuit examples under this document, you shall evaluate your products thoroughly both in stand-alone basis and within your overall systems. You shall be solely responsible for deciding whether to adopt/use Epson products with your products.
5. Epson has prepared this document carefully to be accurate and dependable, but Epson does not guarantee that the information is always accurate and complete. Epson assumes no responsibility for any damages you incurred due to any misinformation in this document.
6. No dismantling, analysis, reverse engineering, modification, alteration, adaptation, reproduction, etc., of Epson products is allowed.
7. Epson products have been designed, developed and manufactured to be used in general electronic applications and specifically designated applications (“Anticipated Purpose”). Epson products are NOT intended for any use beyond the Anticipated Purpose that requires particular quality or extremely high reliability in order to refrain from causing any malfunction or failure leading to critical harm to life and health, serious property damage, or severe impact on society, including, but not limited to listed below (“Specific Purpose”). Therefore, you are strongly advised to use Epson products only for the Anticipated Purpose. Should you desire to purchase and use Epson products for Specific Purpose, Epson makes no warranty and disclaims with respect to Epson products, whether express or implied, including without limitation any implied warranty of merchantability or fitness for any Specific Purpose. Please be sure to contact our sales representative in advance, if you desire Epson products for Specific Purpose:
   Space equipment (artificial satellites, rockets, etc.)/ Transportation vehicles and their control equipment (automobiles, aircraft, trains, ships, etc.) / Medical equipment/ Relay equipment to be placed on sea floor/ Power station control equipment / Disaster or crime prevention equipment/Traffic control equipment/ Financial equipment
   Other applications requiring similar levels of reliability as the above
8. Epson products listed in this document and our associated technologies shall not be used in any equipment or systems that laws and regulations in Japan or any other countries prohibit to manufacture, use or sell. Furthermore, Epson products and our associated technologies shall not be used for the purposes of military weapons development (e.g. mass destruction weapons), military use, or any other military applications. If exporting Epson products or our associated technologies, please be sure to comply with the Foreign Exchange and Foreign Trade Control Act in Japan, Export Administration Regulations in the U.S.A (EAR) and other export-related laws and regulations in Japan and any other countries and to follow their required procedures.
9. Epson assumes no responsibility for any damages (whether direct or indirect) caused by or in relation with your non-compliance with the terms and conditions in this document or for any damages (whether direct or indirect) incurred by any third party that you give, transfer or assign Epson products.
10. For more details or other concerns about this document, please contact our sales representative.
11. Company names and product names listed in this document are trademarks or registered trademarks of their respective companies.