MHz Range Crystal unit FA-238

SEIKO EPSON CORPORATION

Product name FA-238 25.000000 MHz 7.0 +20.0-20.0

Product Number / Ordering code Q22FA23801839xx

Please refer to the 5.Packing information about xx (last 2 digits)

Pb free / Complies with EU RoHS directive

Reference weight Typ. 16 mg

1.Absolute maximum ratings

Parameter	Symbol	Min.	Typ.	Max.	Unit	Conditions / Remarks
Storage temperature	T_stg	-40	-	+125	ºC	Storage as single product
Operating temperature	T_use	-40	-	+105	ºC	

2.Specifications(characteristics)

Parameter	Symbol	Min.	Typ.	Max.	Unit	Conditions / Remarks
Nominal frequency	f_nom	-	25.000000	-	MHz	Fundamental
Frequency tolerance	f_tol	-20	-	+20	x 10^{-6}	@+25ºC
Frequency Stability over temperature	f_tem	-20	-	+20	x 10^{-6}	-40ºC to +85ºC
Operating temperature	T_use	-40	-	+85	ºC	
Level of drive	DL	10	100	200	µW	
Load capacitance	CL	-	7	-	pF	
Motional resistance (ESR)	R1	-	-	50	Ω	
Motional capacitance	C1	-	3.07	-	fF	
Motional inductance	L1	-	13.18	-	mH	
Shunt capacitance	C0	-	1.08	-	pF	
Frequency aging	f_age	-5	―	+5	x10^{-6} /yea	@+25ºC, First year

3.External dimensions (Unit: mm)

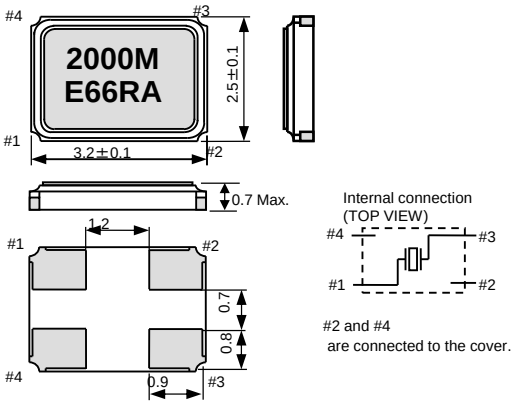

4.Footprint(Recommended) (Unit: mm)

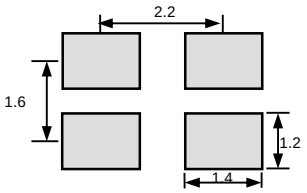

5.Packing information

[1]Product number last 2 digits code (xx) description The recommended code is "17"

Q22FA23801839xx

Code	Condition	Code	Condition
01	Any Q'ty vinyl bag(Tape cut)	14	1000pcs / Reel
11	Any Q'ty / Reel	15	2000pcs / Reel
12	250pcs / Reel	00	3000pcs / Reel
13	500pcs / Reel	17	4000pcs / Reel

[2] Taping specification

Subject to EIA-481 & IEC-60286

(1) Tape dimensions TE0804L

Material of the Carrier Tape : PS

Material of the Top Tape : PET+PE

Unit: mm

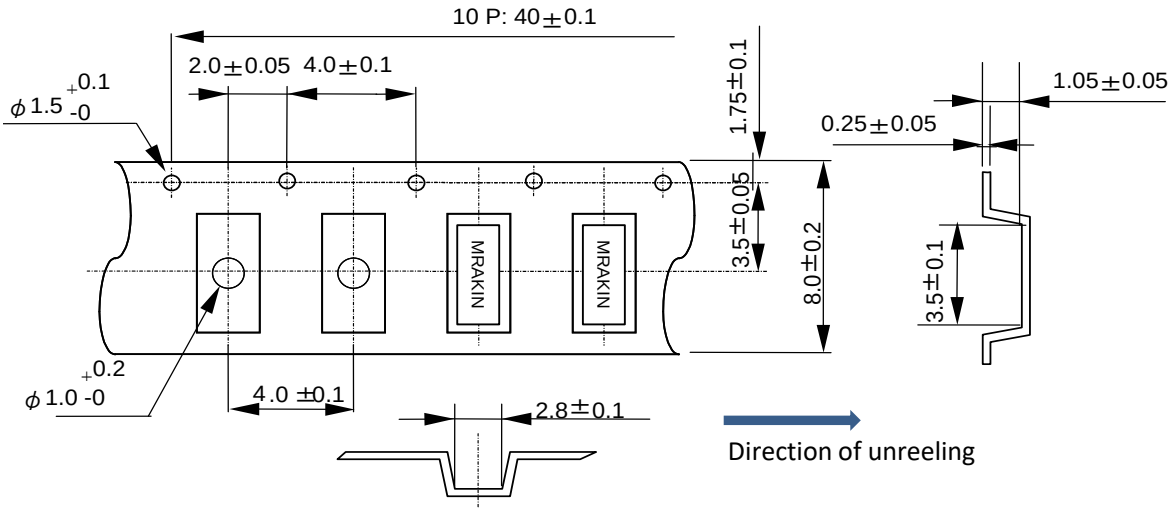

(2) Reel dimensions

Center material : PS

Material of the Reel : PS

Unit: mm

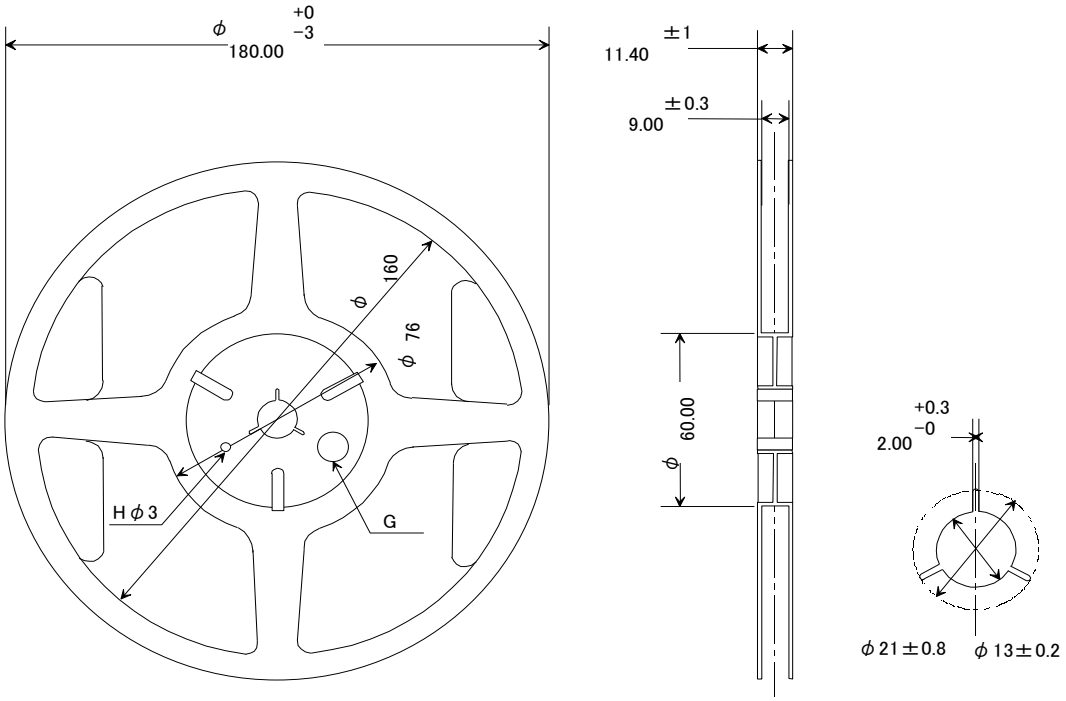

6.Reflow profile

Reflow condition

Pre Heating Temperature
Tp1 ~ Tp2 = + 170 ° C
Heating Temperature
TMlt = + 220 ° C
Peek Temperature
TMax. = + 260 ° C

Point of measuring
In case of Solderability
Terminal.
In case of Resistance to soldering heat
Surface.

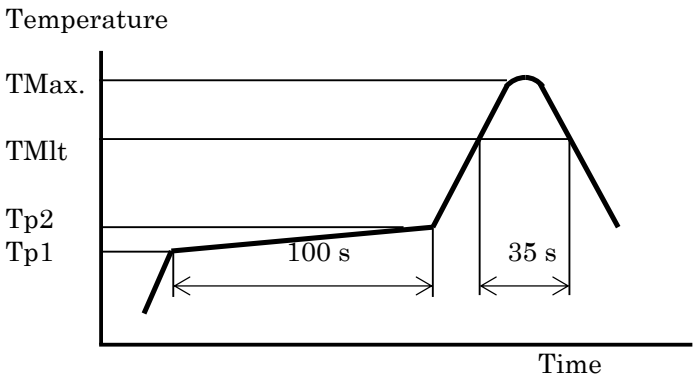

7.Notice

NOTICE：PLEASE READ CAREFULLY BELOW BEFORE THE USE OF THIS DOCUMENT

1. The content of this document is subject to change without notice. Before purchasing or using Epson products, please contact with sales representative of Seiko Epson Corporation (“Epson”) for the latest information and be always sure to check the latest infor mation published on Epson’s official web sites and resources.
2. This document may not be copied, reproduced, or used for any other purposes, in whole or in part, without Epson’s prior consent.
3. Information provided in this document including, but not limited to application circuits, programs and usage, is for reference purpose only. Epson makes no guarantees against any infringements or damages to any third parties’ intellectual property rights or any other rights resulting from the information. This document does not grant you any licenses, any intellectual property rights or any other rights with respect to Epson products owned by Epson or any third parties.
4. Epson has prepared this document carefully to be accurate and dependable, but Epson does not guarantee that the information is always accurate and complete. Epson assumes no responsibility for any damages you incurred due to any misinformation in this document.
5. Epson products listed in this document and our associated technologies shall not be used in any equipment or systems that laws and regulations in Japan or any other countries prohibit to manufacture, use or sell. Furthermore, Epson products and our associated technologies shall not be used for the purposes of military weapons development (e.g. mass destruction weapons), military use, or any other military applications. If exporting Epson products or our associated technologies, please be sure to comply with the Foreign Exchange and Foreign Trade Control Act in Japan, Export Administration Regulations in the U.S.A (EAR) and other export-related laws and regulations in Japan and any other countries and to follow their required procedures.
6. Epson assumes no responsibility for any damages (whether direct or indirect) caused by or in relation with your non-compliance with the terms and conditions in this document or for any damages (whether direct or indirect) incurred by any third party that you give, transfer or assign Epson products.
7. For more details or other concerns about this document, please contact our sales representative.
8. Company names and product names listed in this document are trademarks or registered trademarks of their respective companies.

●Disclaimer

1. Epson products are designed for use in general electronic equipment applications that do not require extremely high reliability or safety.

2. Epson does not represent or warrant that its products will not cause a failure for any particular application, except for cases where the failure is a direct result caused by defects in materials and workmanship of this product.
If a product fails due to defects in materials and workmanship, to the maximum extent permitted by law, we will, at our sole discretion, refund or replace the affected product.

3. When products for used directly or indirectly in certain devices or applications (ex. Nuclear power, aerospace, infrastructure facilities, medical equipment, etc.) which are connected to or affect safety of human life or property, Customer is solely responsible for determining if the products and respective specifications are suitable for the intended use in particular customer applications.
Customer shall implement necessary and proper safety design and measures (including redundant design, malfunction prevention design, etc.) to ensure reliability and safety before using the products in/with customer’s Equipment.

4.No dismantling, analysis, reverse engineering, modification, alteration, adaptation, reproduction, etc., of Epson products is allowed. Furthermore, any defects caused by this are not covered by the warranty.

©Seiko Epson Corporation 2025